13092 / 757392 87-97 NISSAN PICKUP 2WD AND 4WD

10/8/2012

GROSS LOAD CAPACITY WHEN USED AS A WEIGHT CARRYING HITCH: 5,000 LBS. TRAILER WEIGHT & 500 LBS. TONGUE WEIGHT.
GROSS LOAD CAPACITY WHEN USED AS A WEIGHT DISTRIBUTION HITCH: 6,000 LBS. TRAILER WEIGHT & 600 LBS. TONGUE WEIGHT

*****DO NOT EXCEED VEHICLE MANUFACTURER'S RECOMMENDED TOWING CAPACITY.*****

Parts List

ITEM	QTY	PART NUMBER	DESCRIPTION
1	2	CM-13092-B	.313 BRACKET
2	1	CM-13092-EB	EXHAUST BRACKET
3	1	1/2"	FISHWIRE TOOL
4	6	1/2-13 x 1 1/4	HEX BOLT
5	4	CM-SP1	.250 x 1.50 x 2.00" SQUARE HOLE SPACER
6	2	1/2-13 x 1 3/4	HEX BOLT
7	12	HFN 1213	HEX FLANGE NUT
8	6	1/2-13 x 1 3/4	CARRIAGE BOLT

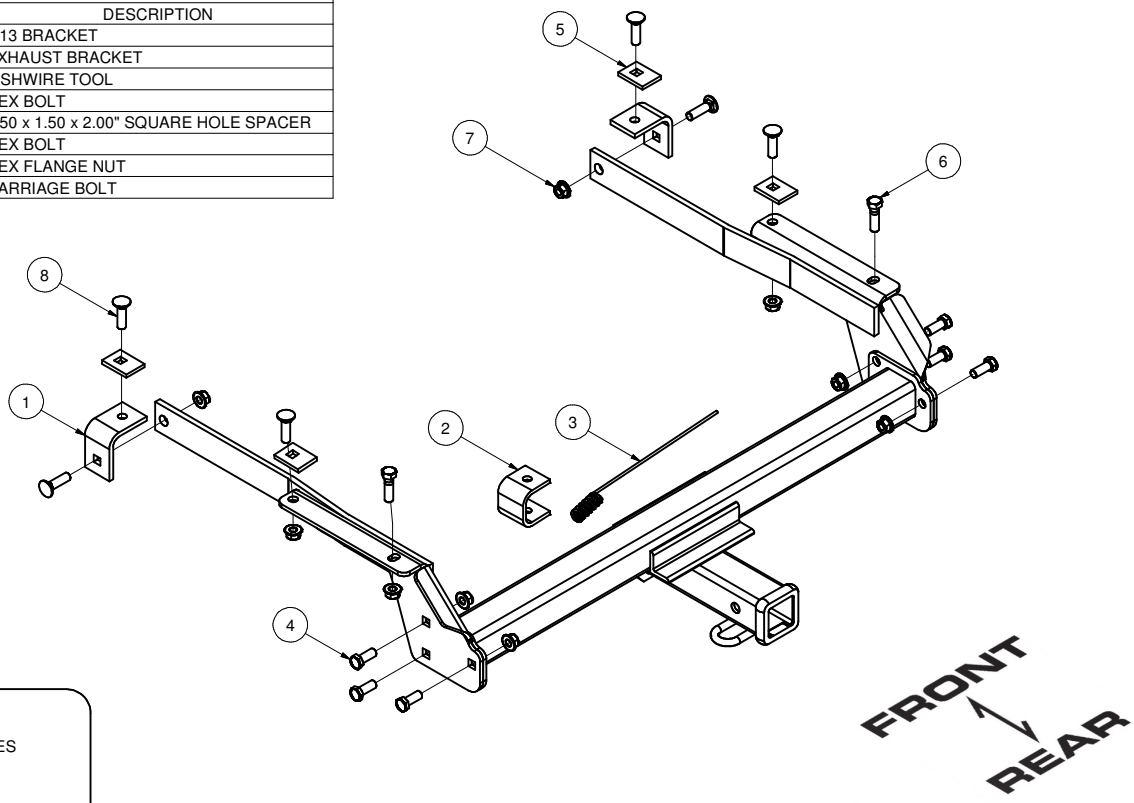

HITCH WEIGHT: 45 LBS.
INSTALL TIME: 30 MINUTES
INSTALL NOTES:
- DRILLING REQUIRED

INSTALLATION STEPS

Vehicles with bumper

1) Remove existing hex nut from exhaust bracket to lower exhaust.
2) Remove one bolt attaching the bumper bracket and reinforcement angle to the end of frame.
3) Locate the 1/2" holes, (1) per side, on bottom of frame just forward of spring shackle & rearward of shock absorber. **Note:** For vehicles that do not have 1/2" hole, position hitch arm on vehicle, using arm as a template, drill the the forward 1/2" holes into the vehicle frame. On some models it may be necessary to enlarge the hole using a 1/2" drill bit.
4) On vehicles with enclosed frames, fishwire the 1/2" x 1 3/4" carriage bolt & block through the end of the frame to the forward attachment hole.
5) On some models (regular cab, short box, right side) interference with the shock absorber mount requires the forward attachment fasteners to be installed. **Note:** Flat washer to be modified by installer. This is required to ensure that the bolt installed is straight & will not bend after tightening.
6) Loosely install the forward angle bracket & fasteners onto the forwardmost bolt.
7) Position hitch arm on vehicle. Loosely install 1/2" x 1 3/4" carriage bolt & fasteners through hitch side arm & forward angle bracket. Repeat operation for opposite arm.
8) Loosely install the center & rearward fasteners through the horizontal position of vehicle frame & hitch side bracket.
9) Install forward angle bracket & fasteners through 1/2" holes as described in step 3.
10) Raise crossmember assembly into position between hitch arms and install (3) 1/2" x 1 1/4" per side & fasteners.
11) Torque 1/2" fasteners to 110 LB.-FT.
12) Replace exhaust system. **Note:** It may be necessary to install spacer between muffler bracket and exhaust pipe bracket for proper clearance.

PERIODICALLY CHECK THIS RECEIVER HITCH TO ENSURE THAT ALL FASTENERS ARE TIGHT AND THAT ALL STRUCTURAL COMPONENTS ARE SOUND.

Curt Manufacturing Inc., warrants this product to be free of defects in material and/or workmanship at the time of retail purchase by the original purchaser. If the product is found to be defective, Curt Manufacturing Inc., may repair or replace the product, at their option, when the product is returned, prepaid, with proof of purchase. Alteration to, misuse of, or improper installation of this product voids the warranty. Curt Manufacturing Inc.'s liability is limited to repair or replacement of products found to be defective, and specifically excludes liability for incidental or consequential loss or damage.