12233 / 36216

92-99 BUICK CENTURION FWD AND LE SABRE PASSENGER FWD
92-95 OLDSMOBILE DELTA 88, EIGHTY EIGHT, LSS & ROYALE
92-95 PONTIAC BONNEVILLE (ALL MODELS EXCEPT SSE AND SSEI)

9/28/2012

GROSS LOAD CAPACITY WHEN USED AS A WEIGHT CARRYING HITCH: 3500 LBS. TRAILER WEIGHT & 350 LBS. TONGUE WEIGHT.
*****DO NOT EXCEED VEHICLE MANUFACTURER'S RECOMMENDED TOWING CAPACITY.*****

Parts List

ITEM	QTY	PART NUMBER	DESCRIPTION
1	8	3/8"	CONICAL TOOTHED WASHER
2	4	3/8 - 16	HEX NUT
3	2	CM-3801-UBS	3/8-16 x 1.94 x 2.50 SQ U-BOLT
4	6	3/8"	WASHER
5	6	5/16-18	HEX FLANGE NUT
6	1	5/16-18 x 1 1/4 LG.	HEX BOLT
7	5	5_16 - 18 x 2 HEX TAP BOLT	HEX TAP BOLT
8	1	CM-12233-EB	.250" A-36 H.R. (COMMERCIAL QUALITY)

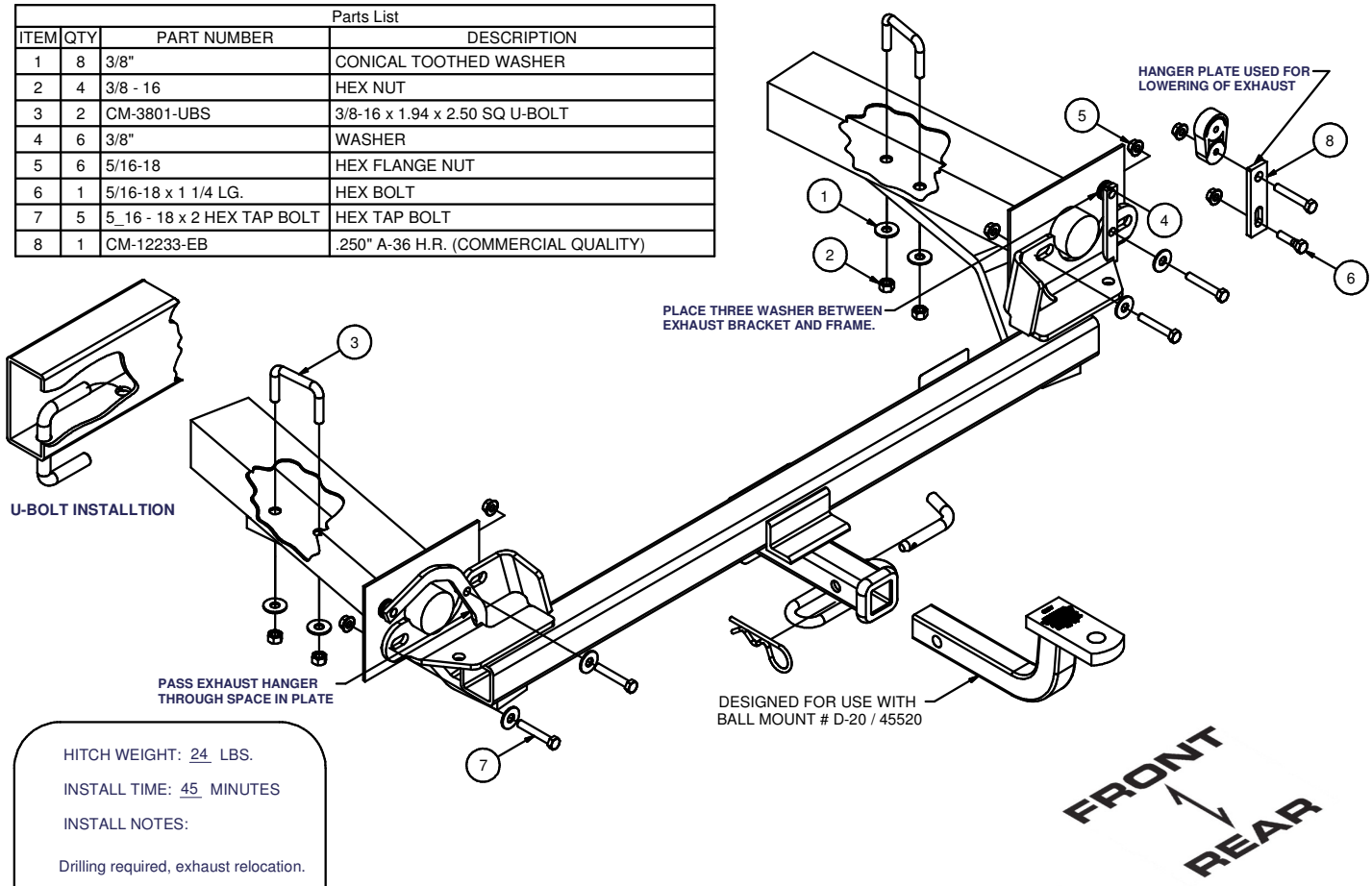

HITCH WEIGHT: 24 LBS.

INSTALL TIME: 45 MINUTES

INSTALL NOTES:

Drilling required, exhaust relocation.

INSTALLATION STEPS

Read instructions carefully - Installation procedure varies with exhaust system.

1) Remove inboard and lower energy absorber (E/A) unit mounting bolts from both sides of frame. Remove the upper outboard bolt that attaches the exhaust hanger bracket to end of the frame on driver's and passenger side.

2) Position the hitch on the vehicle, and loosely install the 5/16" bolts provided. Use the hitch side arms as a template to drill four holes in the frame. **(NOTE: The side arms must sit flat against the vehicle frame. Chisel or drill out rivets holding heat sheild under side arms if required. Also bend heat shield as needed.) (NOTE: Driver's side exhaust hanger bracket must be reattached through the opening in the hitch plate before reattaching shoulder bolt.)** This will require washers to be used as spacers between the bracket and vehicle.

3) Lower side arms and insert the 3/8 U-bolts through the frame as shown. Raise side arms into position and install the 3/8 conical washers and nuts on the U-bolts.

4) Use three 3/8" flat washers provided to shim space between exhaust bracket and the upper outboard attachment for e/a unit on driver's and passenger side. Use existing fasteners to reattach exhaust hanger bracket. Deformation of sheet metal flanges on E/A mounting surfaces is permissible when fasteners are tightened.

5) Use hanger plate and 5/16 fasteners to lower exhaust on passenger side if necessary for hitch clearance or bend exhaust hangers as needed for clearance.

6) TORQUE SPECS: 5/16" fasteners to 24 ft-lbs / 3/8" fasteners to 45 ft-lbs.

PERIODICALLY CHECK THIS RECEIVER HITCH TO ENSURE THAT ALL FASTENERS ARE TIGHT AND THAT ALL STRUCTURAL COMPONENTS ARE SOUND.

Curt Manufacturing Inc., warrants this product to be free of defects in material and/or workmanship at the time of retail purchase by the original purchaser. If the product is found to be defective, Curt Manufacturing Inc., may repair or replace the product, at their option, when the product is returned, prepaid, with proof of purchase. Alteration to, misuse of, or improper installation of this product voids the warranty. Curt Manufacturing Inc.'s liability is limited to repair or replacement of products found to be defective, and specifically excludes liability for incidental or consequential loss or damage.