11295 TOYOTA COROLLA (INCLUDING "S")

7/12/2012

GROSS LOAD CAPACITY WHEN USED AS A WEIGHT CARRYING HITCH: 2,000 LBS. TRAILER WEIGHT & 200 LBS. TONGUE WEIGHT.
*****DO NOT EXCEED VEHICLE MANUFACTURER'S RECOMMENDED TOWING CAPACITY.*****
WARNING: ALL NON-TRAILER LOADS APPLIED TO THIS PRODUCT MUST BE SUPPORTED BY AUXILIARY STABILIZING STRAPS.
**** FAILURE TO PROPERLY SUPPORT NON-TRAILER LOADS WILL VOID PRODUCT WARRANTY****
HAVING INSTALLATION QUESTIONS? CALL TECHNICAL SUPPORT AT 1-800-798-0813

Parts List			
ITEM	QTY	PART NUMBER	DESCRIPTION
1	4	M12-1.25 x 30mm	HEX BOLT
2	4	1/2"	CONICAL TOOTHED WASHER

TOOLS REQUIRED
19mm SOCKET
EXTENSION
RATCHET
TORQUE WRENCH

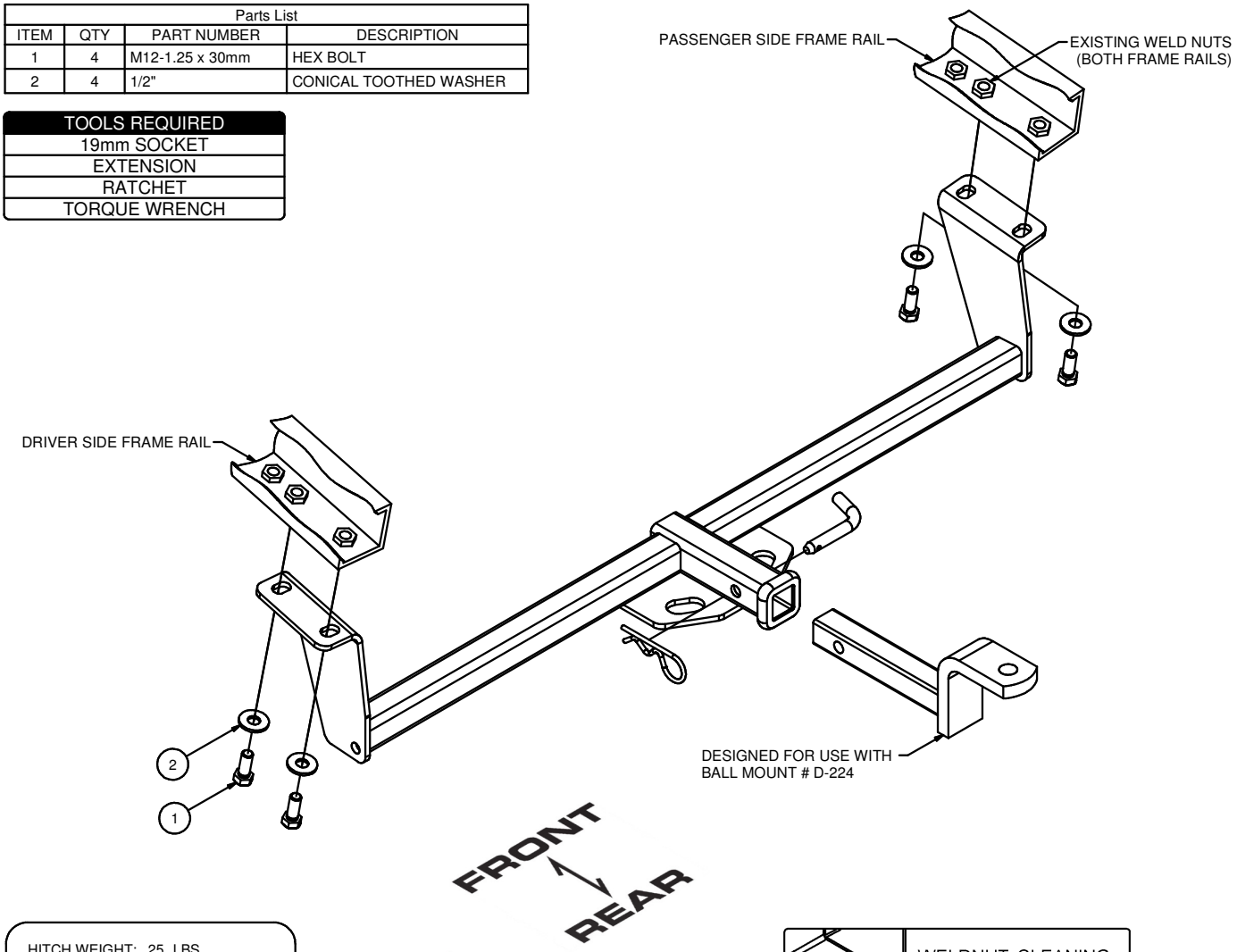

HITCH WEIGHT: 25 LBS.

INSTALL TIME

PROFESSIONAL: 15 MINUTES

NOVICE (DIY): 30 MINUTES

INSTALL NOTES:

-NO DRILLING REQUIRED
-REMOVE TOW HOOKS

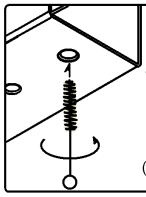

WELDNUT CLEANING

To remove debris from weldnuts in frame, spray lubricant or compressed air into hole. For heavy debris, use a small wire brush. (Be careful not to damage threads).

INSTALLATION STEPS

1. Remove the tow hooks (if equipped), return to customer.
2. Raise the hitch into position, aligning the slots in the side plates with the existing weld nuts in the frame rails.
3. Install hex bolts and conical toothed washers as shown.
4. Torque all 12mm hardware to 86 ft-lbs.

PERIODICALLY CHECK THIS RECEIVER HITCH TO ENSURE THAT ALL FASTENERS ARE TIGHT AND THAT ALL STRUCTURAL COMPONENTS ARE SOUND.

Curt Manufacturing Inc., warrants this product to be free of defects in material and/or workmanship at the time of retail purchase by the original purchaser. If the product is found to be defective, Curt Manufacturing Inc., may repair or replace the product, at their option, when the product is returned, prepaid, with proof of purchase. Alteration to, misuse of, or improper installation of this product voids the warranty. Curt Manufacturing Inc.'s liability is limited to repair or replacement of products found to be defective, and specifically excludes liability for incidental or consequential loss or damage.