INSTALLATION MANUAL

203012-2

Parts List	
1	Driver / left side bar
1	Passenger / right side bar
2	Mounting bracket, front
2	Mounting bracket, middle
2	Mounting bracket, rear
8	Hex head bolt, M8 - 1.25 x 30mm
8	Flat washer, M8
8	Lock washer, M8
16	Hex head bolt, M10 - 1.50 x 30mm
16	Flat washer, M10
16	Lock washer, M10
2	Nut plate, M10 (105mm x 25mm x 5mm)

Torque Specifications		
METRIC	M6 bolt	3 ft.-lbs.
	M8 bolt	7 ft.-lbs.
	M10 bolt	16 ft.-lbs.
	M12 bolt	28 ft.-lbs.
SAE	1/4" bolt	3 ft.-lbs.
	5/16" bolt	7 ft.-lbs.
	3/8" bolt	16 ft.-lbs.
	7/16" bolt	20 ft.-lbs.
	1/2" bolt	28 ft.-lbs.

Level of Difficulty

Easy

Scan for helpful install tips

Product Image

Notes and Maintenance

Before you begin installation, read all instructions thoroughly.

Proper tools will improve the quality of installation and reduce the time required.

For stainless steel and aluminum, polish may be used to clear small scratches and scuffs on the finish. Mild soap may be used also to clean the product.

Refer to the table to the left when securing hardware during the installation process to help prevent damage to the product or vehicle.

PROCEDURE

1. Begin installation by working on driver side of the vehicle (refer to Figures 1. 1- 1.3)

2. Locate and remove (4) rubber drain plugs located on inside of rocker panel where the front and center mount brackets will be installed.
   Note: The plugs may be hidden under factory undercoating. Scrape away undercoating in this area to provide a flat surface for the brackets.

3. Attach front and center brackets (same bracket) to the inside rocker panel where the drain plugs were removed using (4) M8 – 1.25 x 30mm Hex Head Bolts, (4) M8 Lock Washers, and (4) M8 Flat Washers(see Figure 1.2). Hand tighten.

4. Locate the rear mounting holes (one slot and one hole) on the underside of the rocker panel, below the rear door. Insert (1) M10 Nut Plate into slot so holes of Nut Plate line up with mount holes on the vehicle(see Figure 1.3).
   Note: Extruded side of Nut Plate should face up.

5. Attach rear bracket to vehicle rocker panel using (2) M10 – 1.50 x 30mm Hex Head Bolts, (2) M10 Lock Washers, and (2) M10 Flat Washers. Hand tighten bolts through Nut Plate.

6. Attach side tube to brackets using (6) M10 – 1.50 x 30mm Hex Head bolts and (6) M10 Lock Washers. Hand tighten.
   Note: Step Pad closer to the end of the tube goes to the rear. (see Figure 1.1).

7. Center and level Side tube. Tighten and torque M10 fasteners to 30 FT-LBS and M8 fasteners to 19 FT-LBS to complete assembly.

8. Repeat process for passenger side of vehicle to complete installation.

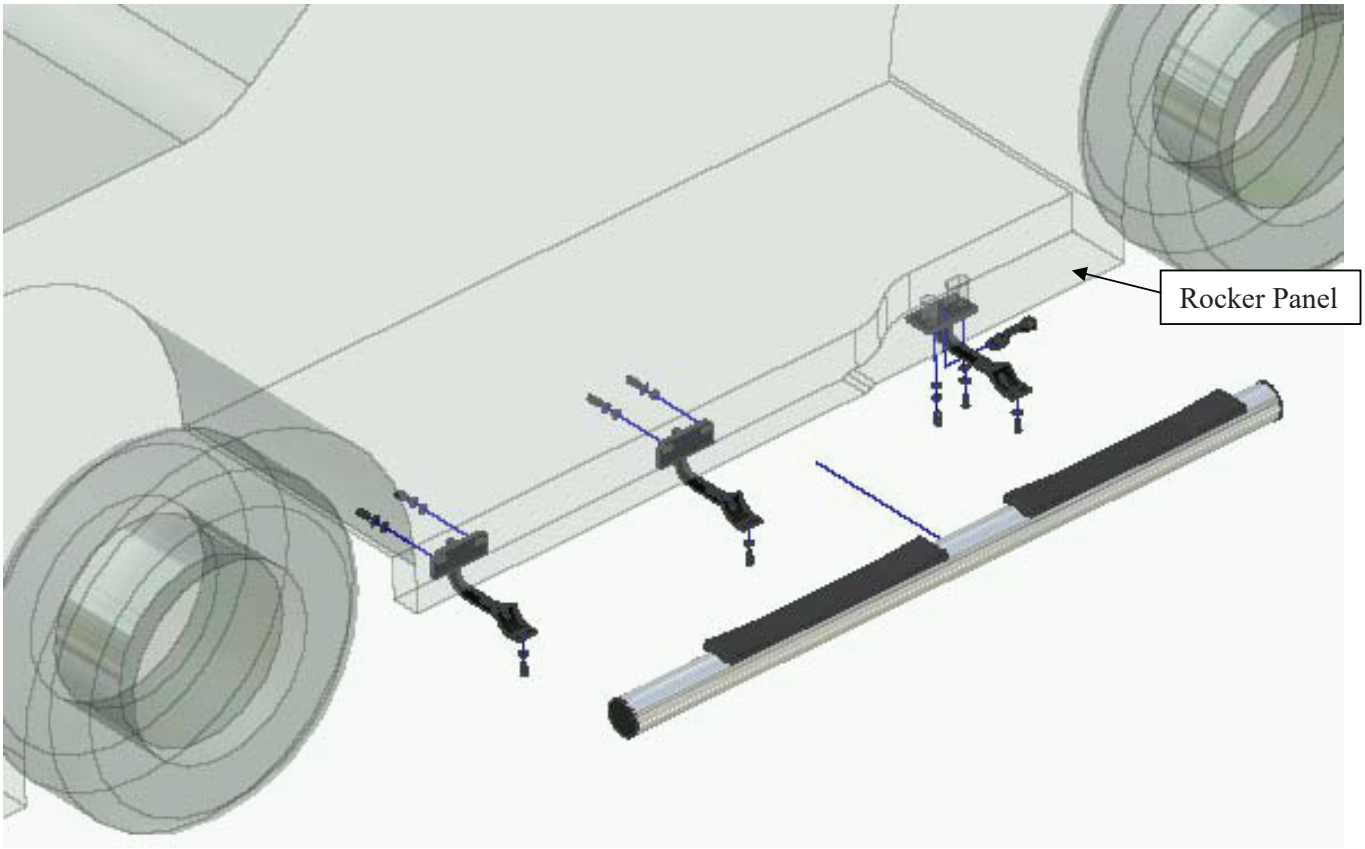

Figure 1.1 - Front Driver-Side View

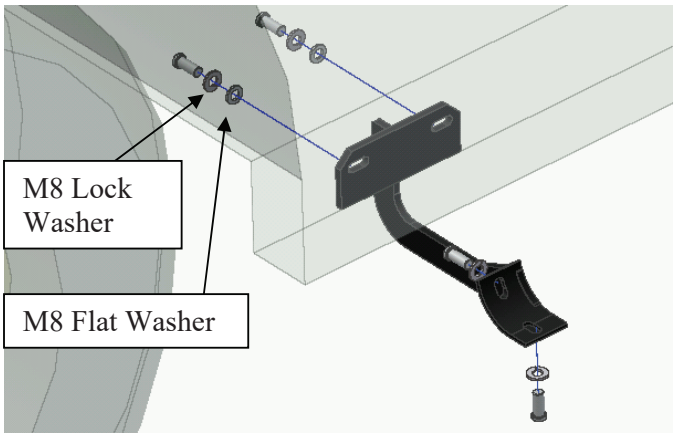

Figure 1.2 - Front and Center Bracket

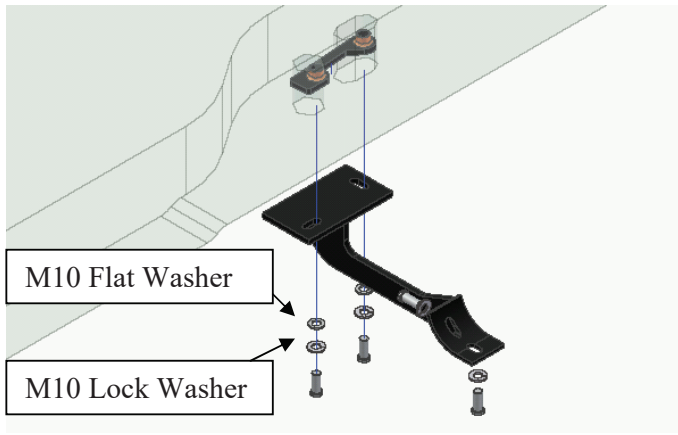

Figure 1.3 - Rear Bracket