CURT®

2024 CATALOG & APPLICATION GUIDES

INTENTIONALLY LEFT BLANK
FOR TWO-PAGE VIEWING

EVERYTHING YOU NEED

TO ENJOY THE ROAD AHEAD

CURT curtmfg.com

RANCH HAND ranchhand.com

ARIES ariesautomotive.com

LUVERNE luvernetruck.com

UWS uwsta.com

RETRAC retracmirrors.com

LIPPERT

Lippert is a leading, global manufacturer and supplier of highly engineered products and customized solutions dedicated to shaping, growing and bettering the RV, marine, automotive, commercial vehicle and building products industries. We combine our strategic manufacturing capabilities with the power of our winning team culture to deliver unrivaled customer service, award-winning innovation and premium products to every industry and person we serve.

LIPPERT CARES

BUSINESS AS A FORCE FOR GOOD

OUR VISION: TO BE A FORCE FOR GOOD IN THE WORLD

Since 2016, Lippert has focused on designing a cultural foundation from which our success is based, and it stems from one simple driving force: At Lippert, Everyone Matters. From the shop floor to the C-suite, we simply care about people. Our culture is grounded in our five core values that we practice in our business every day.

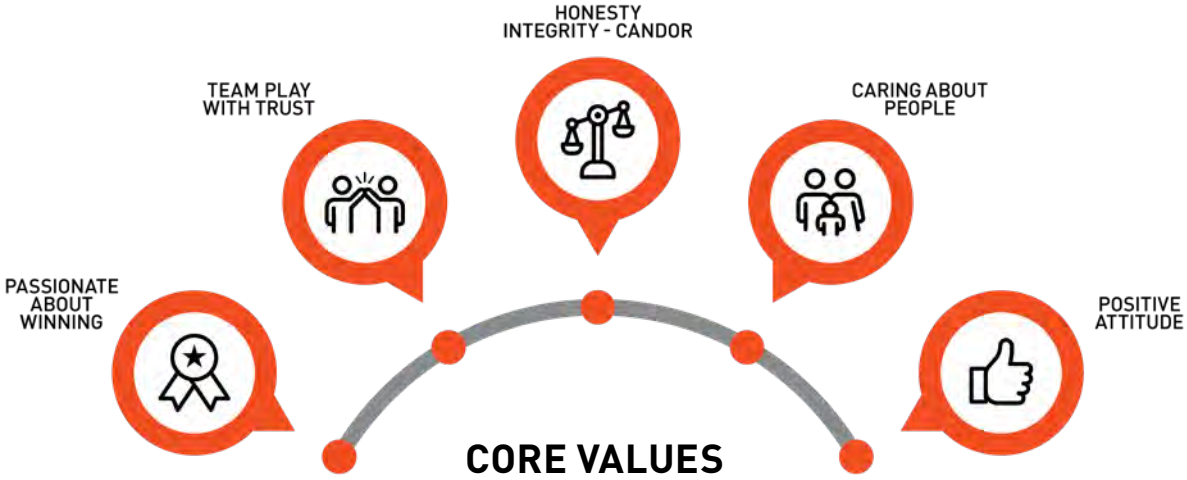

OVER SIX YEARS OF IMPACT

2,000+
non-profits served

800,000+
volunteer hours

$2,000,000+
annually donated to charity

NEW PRODUCTS

Custom-Fit Trailer Hitches

Hitches are at the heart of our new product efforts. We offer many first-to-market designs, in-house testing and an industry-leading finish. **Page 28**

Custom Wiring

We continue to advance our plug-and-play wiring line with new technology, like potted housings and many first-to-market applications. **Page 28**

Tire Linc® Auto Tire Pressure & Temp Monitoring System

Monitors up to 20 tires and alerts when high or low tire pressure and temperature occurs through the OneControl® app on Android or iOS smartphones. **Page 117**

Trailer-Mounted TruTrack™ 4P

Two-part system prevents the need to uninstall spring bars or remove the WD hitch when disconnecting and has four points of sway control. **Page 182**

Trailer-Mounted TruTrack™ 2P

Avoid the tedious task of loading and unloading the spring bars each time you tow when using a WD system. Features two points of sway control. **Page 182**

True Course™ Electronic Sway Control System

Advanced technology monitors sway and activates the trailer brakes independently of the driver and brake controller to prevent trailer sway in real-time. **Page 188**

Universal OEM Puck Offset Gooseneck Ball

Provides an extra 4" of rearward offset for improved turning and clearance with 6.5" of rise and is rated for towing up to 30,000 lbs. GTW. **Page 246**

RockerBall™ Universal OEM Puck Offset Gooseneck Ball

All the great features of RockerBall™ with an extra 4" of rearward offset for added turning and clearance for towing up to 30,000 lbs. GTW. **Page 246**

Ford OEM-Style Gooseneck Hitch

Features a one-person install and is built with fewer pieces to keep installation simple so it can be lifted and bolted into place quickly and easily. **Page 249**

TriFlex™ NEXT Brake Controller

Features a triple-axis, accelerometer for proportional, smooth stops and dynamic power adjustments for navigating various terrains. **Page 141**

Discovery™ NEXT Brake Controller

This powerful time-delay brake controller allows you to manage 2-8 trailer brakes at a time and is compatible with electric over hydraulic brakes. **Page 141**

Venturer™ NEXT Brake Controller

Features fully adjustable power and ramp time, with 10 different gain and nine load settings to adjust to your specific towing situation. **Page 141**

Competitor-to-CURT Adapter harness

Adapt compeditive brake controllers to be compatible with a CURT brake controller harness in a snap. Simply plug into place and go. **Page 142**

Splice-In Quick Plug for Brake Controllers

This new harness reduces input voltage from the vehicle and eliminates backfeed on the brake light that can cause warnings in select vehicles. **Page 142**

Trailer Axle Components

We offer a full lineup of Lippert brake assemblies and hubs, leaf springs, brake hardware and genuine Lippert trailer axle replacement parts. **Page 288**

Trailer Coupler Lock

Compatible with 1-7/8", 2" or 2-5/16" couplers and secures any trailer quickly. The bright orange color deters theft while providing visibility. **Page 114**

Adjustable Channel Mount with Hook and Step

Eliminate the need for all other ball mounts. This 2" adjustable hitch includes a 2" and 2-5/16" ball and a tow hook for towing up to 10K lbs. GTW. **Page 102**

ActiveLink™ Ball Mount Accessory

Click, load and go with the ActiveLink™ ball mount. Quickly snaps into any ActiveLink™ shank when you need to tow up to 3,500 lbs. GTW. **Page 307**

EASILY MANAGE YOUR TRAILER FROM YOUR SMARTPHONE

Boost awareness and control during towing with unparalleled connectivity and comfort. With CURT OneControl® Auto, transform your truck and trailer into a smart, interconnected rig, easily monitored via smartphone or tablet. Our innovative towing line employs advanced technologies, enhancing comfort, awareness, and safety on the open road.

Echo® Series

True Course™

Tire Linc® Auto

UNDERSTANDING TOWING
Towing basics and electrical guides
006 - 009

TRAILER HITCHES
Rear and front mount, multi-fit and RV hitches
010 - 027

APPLICATION GUIDE
Hitch and wiring applications listed by make and model
028 - 079

TOWING ACCESSORIES
Ball mounts, trailer balls, locks, pintles and more
080 - 133

TOWING ELECTRICAL
Brake controllers, custom wiring, adapters and connectors
134 - 177

WEIGHT DISTRIBUTION
TruTrack™ systems, WD hitch kits and sway control
178 - 191

5TH WHEEL HITCHES
OEM puck system options, sliders and hitches up to 30K
192 - 225

FLAT TOWING
Tow bars, base plates, wiring and accessories
226 - 239

GOOSENECK HITCHES
OEM puck system kits, OEM-style, Double Lock EZr™ and more
240 - 263

TRAILER PARTS & ACCESSORIES
Jacks, couplers, lunette rings, safety chains, axle parts and more
264 - 299

CARGO MANAGEMENT
Cargo carriers, bike racks, cargo straps and tie-downs
300 - 327

MARKETING SUPPORT
Literature, signage and display stands
328 - 329

NUMERICAL TRAILER HITCHES
Numerical listing of front and rear mount trailer hitches
330 - 340

NUMERICAL PRODUCTS
Complete, numerically sorted product listing
341 - 345

NUMERICAL CUSTOM WIRING
Custom wiring listed numerically
346 - 352

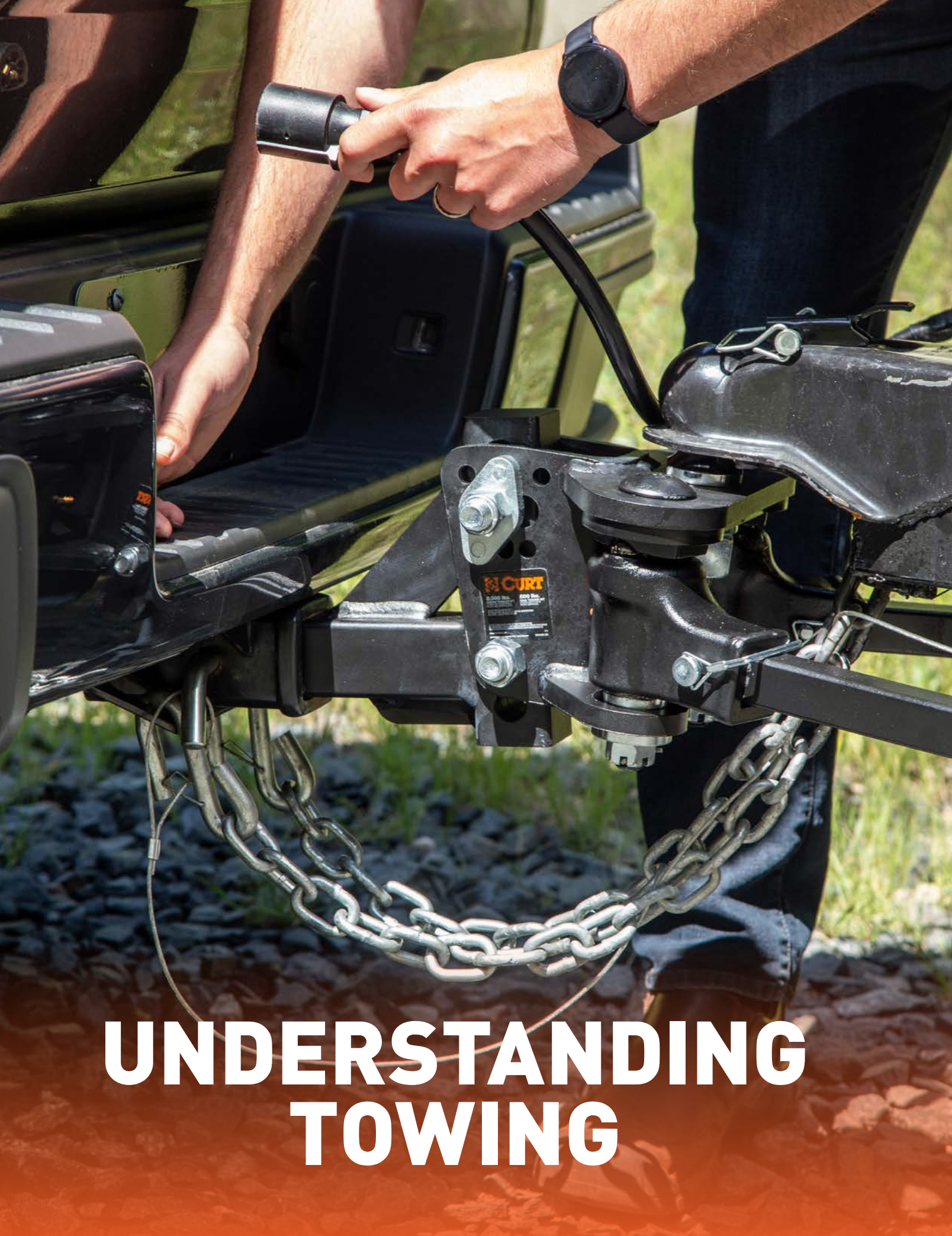

UNDERSTANDING TOWING

FOR MORE INFORMATION

CURT University

This self-serve tool is a one-stop shop for marketing resources, including presentations, flyers, merchandising, videos and more!

TOWING 101

A beginner's guide to understanding the basics of towing

visit curtmfg.com/introduction

Towing 101

The beginner's guide is perfect for educating new employees. It covers all key aspects of towing, from hitch selection to trailer hook-up.

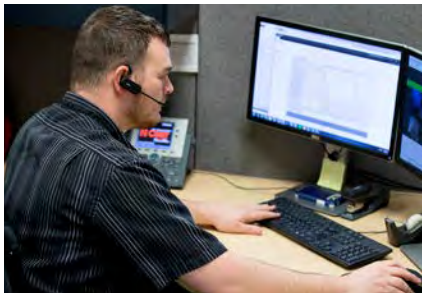

Product Support Team

If you have questions about CURT products or how to use them, our Product Support Team is standing by. Simply call 877.287.8634.

SECTION INDEX

08 Towing Basics

09 CURT University

TOWING BASICS

Gross trailer weight (GTW)

The gross trailer weight is the total weight of a trailer and its cargo. For example, GTW = boat + trailer + cooler + fishing gear. It is vitally important to know the GTW to ensure safe towing.

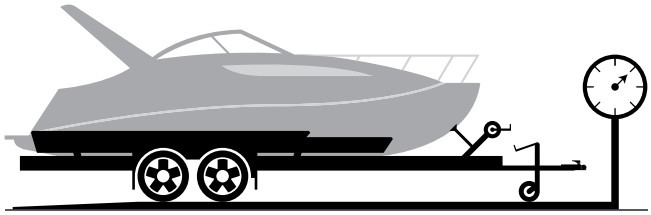

Weight carrying capacity (WC)

The weight carrying capacity is the total weight a trailer hitch is safely rated to tow without the assistance of a weight distribution system. When towing, the weight capacity is always limited to the lowest-rated towing component.

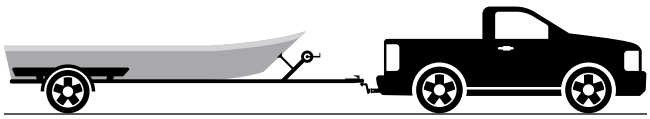

Tongue weight (TW)

Tongue weight is the downward force of the trailer at the coupling point. Proper TW should be about 10% to 15% of the GTW. TW can be measured using a commercial scale or bathroom scale*, following the method below.

Multiply scale reading by three

*only use a scale capable of estimated TW

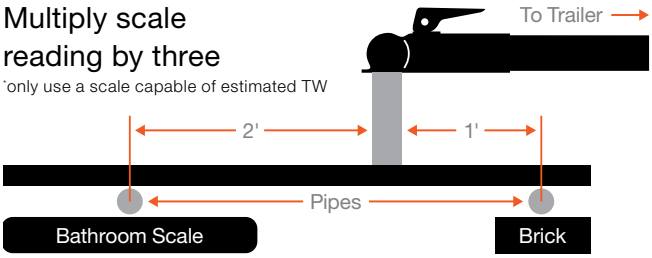

Weight distribution capacity (WD)

The weight distribution capacity is the maximum amount of weight a trailer hitch can safely tow with a weight distribution hitch installed. A weight distribution hitch distributes a portion of the TW across the vehicle and trailer to promote level towing. See page 174 for WD products.

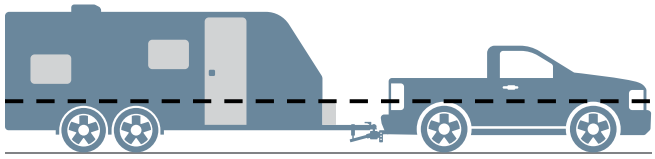

Measuring ball mount drop and rise

When selecting a ball mount, it is important to determine drop / rise for leveling the trailer. Use the diagram below to find this value. B minus A equals C. If C is negative, this indicates the amount of drop needed. If positive, it indicates rise.

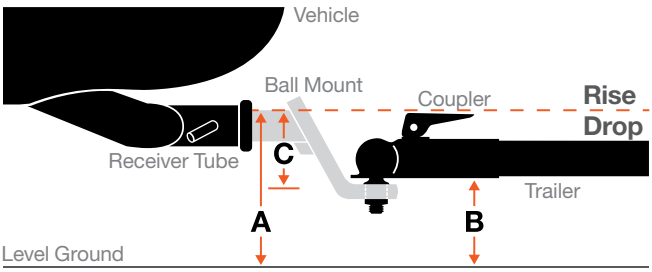

Level towing

Using a ball mount with the proper amount of drop or rise will allow for level towing across the trailer and vehicle. Without a level vehicle-trailer connection, the trailer may wander or sway and can lead to the driver's loss of control, leading to an accident.

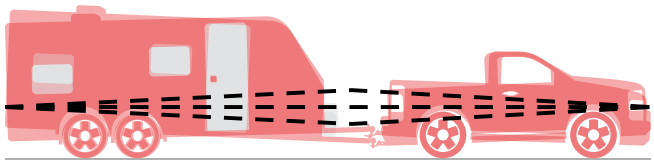

Too much rise or drop

PUT OUR MARKETING ASSETS TO WORK FOR YOU!

CURT UNIVERSITY

CURT University is a self-service learning tool for CURT products and resources and provides easy access to nearly all of our marketing support materials. It is designed to educate our customers to enhance their sales and grow their business!

Scan or visit
curtmfg.com/university

Photos

Our photo library contains nearly 100,000 professional photos of our products. This provides an accurate view of each part, a snapshot of key features and a look at what's included in each package.

This library is available for use on your website and in your store!

Videos

Our in-house video team has produced over 1,300 videos with more published every week. Our primary focus is installation and feature videos, but we also have a number of educational how-tos.

Our videos can easily be embedded on your website through YouTube. In-store options are also available.

How-To Guides

When it comes to towing, users, both new and experienced, have questions. We offer a growing number of how-to guides on our website to help you provide answers.

Our Towing 101 guide is a great place to start, laying out the basics of equipment, installation and safe towing practices.

Literature

Our in-house creative team works tirelessly to publish a variety of high-caliber literature pieces, including everything from new product flyers to the in-depth catalog you're currently browsing!

Place our literature in your store to give your associates and customers a tangible reference and help them to come to a buying decision.

Merchandising

We offer a number of custom-built displays to furnish your store and showcase our products in a professional light. Choose from floor models and planogram options.

We also offer posters, header cards, counter mats and other signage that highlights the advantages of choosing CURT.

Presentations

Educate yourself and train your associates on the key selling points of our products. For each product category, we maintain high-quality training presentations, complete with unique selling points, photography and videos.

TRAILER HITCHES

FEATURED PRODUCTS

Scan QR code for current applications or visit curtmfg.com

Rear-mount hitches

CURT is the industry leader in first-to-market hitch designs, and each one is engineered and tested to the highest safety standards.

Weld-on hitches

We've expanded our weld-on hitch offering to better accommodate service body trucks, including 20k and 18" drop options.

Front-mount hitches

CURT front-mount hitches are vehicle-specific and provide a useful receiver for a cargo carrier, snow plow or even for parking a trailer.

PRODUCT INDEX

13 Class 1 & 2 Trailer Hitches — Made in USA

13 Class 3 & 4 Trailer Hitches — Made in USA

13 Class 5 Trailer Hitches — Made in USA

14 Multi-Fit Trailer Hitches

14 Bumper Hitches — Made in USA

20 Weld-On Trailer Hitches — Made in USA

21 Adjustable RV Hitches — Made in USA

21 RV Bumper Hitches — Made in USA

22 Front Mount Hitches — Made in USA

CUSTOM-FIT TRAILER HITCHES

Scan for current applications or visit curtmfg.com

CURT custom hitches are broken out into five distinct classes based on their receiver tube size and weight ratings. Despite these classes, weight ratings vary by part number. Each hitch is made for vehicle-specific application and is always limited by the lowest-rated towing component.

Product Details

- Made with a vehicle-specific design for a custom fit
- Tested for safety in accordance with SAE J684
- Precisely welded for superior strength and fit
- Protected by a durable black powder coat finish
- Co-cured in a rust-resistant liquid A-coat
- Equipped with an open-back receiver for easy cleaning
- Limited lifetime warranty (see last page for details)

Advantages of CURT trailer hitches

Proud to manufacture all of our custom hitches in the USA (may include imported hardware)

Constructed with a combination of manual and robotic welding for superior strength and fit

A-coat applied inside and out and co-cured with powder coat for maximum rust resistance

Industry-leading, in-house safety and performance testing, according to SAE specifications

CUSTOM-FIT TRAILER HITCHES

For trailer hitch application guide go to page 28

Below is a quick comparison of the five different hitch classes as well as front mount hitches.

1¼ INCH CLASS 1 & 2 HITCHES

- Available with included ball mount, pin and clip (see page 28 for ordering options)

2 INCH CLASS 3 & 4 HITCHES

- Many models feature a concealed main body for an OE look

2 INCH & 2½ INCH CLASS 5 HITCHES

- Constructed with a large, powerful main body
- Features wide safety chain openings for heavy-duty hooks

2 INCH FRONT MOUNT HITCHES

- Ideal for attaching a snow plow, cargo carrier or other accessory
- Up to 9,000 lbs. straight-line pull
- Easily maneuver a trailer into a tight spot
- See page 22 for application information

QUICK COMPARISON

Hitch Class	Rec. Size	GTW	TW	WD	WDTW	Finish
Class 1	1-1/4"	Up to 2,000 lbs.	Up to 200 lbs.	--	--	Gloss black
Class 2	1-1/4"	Up to 3,500 lbs.	Up to 350 lbs.	--	--	Gloss black
Class 3	2"	Up to 8,000 lbs.	Up to 800 lbs.	Up to 12,000 lbs.	Up to 1,200 lbs.	Gloss black
Class 4	2"	Up to 10,000 lbs.	Up to 1,000 lbs.	Up to 12,000 lbs.	Up to 1,200 lbs.	Gloss black
Class 5 - Xtra Duty	2"	Up to 17,000 lbs.	Up to 2,550 lbs.	Up to 17,000 lbs.	Up to 2,550 lbs.	Carbide black
Class 5 - Commercial Duty	2-1/2"	Up to 20,000 lbs.	Up to 2,700 lbs.	Up to 20,000 lbs.	Up to 2,700 lbs.	Carbide black
Front Mount	2"	Up to 5,000 lbs.	Up to 500 lbs.	--	--	Gloss black

Trailer hitch weight ratings vary by part number and are limited to vehicle manufacturer's stated capacities

MULTI-FIT TRAILER HITCHES

Scan for current applications or visit curtmfg.com

For retail settings or if a CURT custom hitch is not available for a particular vehicle, a multi-fit hitch is a dependable alternative. These hitches are made to fit a wide variety of vehicle applications, and most require little or no drilling for installation.

Product Details

- Versatile frame design to fit a variety of vehicles
- Available with 1-1/4" or 2" receiver tube
- Gross trailer weight ratings ranging from 3,500 lbs. up to 15,000 lbs.
- Select models compatible with WD hitches
- Requires little or no drilling on most models
- Robotically welded for superior strength and fit
- Includes mounting hardware (grade-8 on #15510, #15511)
- Durable gloss black powder coat finish
- Informative, full-color retail box (excluding #15510, #15511)
- Limited lifetime warranty (see last page for details)

Multi-fit hitches are designed to perfectly balance a wide range of fitment and an integrated look, providing a safe, secure towing solution

Did You Know?

The class 3 #13902 and #13903 provide a comprehensive retail option for pickups.

MADE IN USA | 2 INCH

BUMPER HITCHES

- Includes safety chain hookups and imported mounting hardware
- Limited lifetime warranty (see last page for details)

19030

19031

Part #	Fits	GTW / TW	Bolt Pattern
19030	Most factory steel bumpers (bolts onto the bottom of step bumper)	5,000 / 500 lbs.	8-1/2" width on center
19031*	Westin and DMI bumpers (bolts onto the bottom of step bumper)	5,000 / 500 lbs.	10-1/2" width on center

* Continued while supplies last

MULTI-FIT HITCH APPLICATION GUIDE

Make / Model	Style	Years	Rec. Size	Part #	Foot Notes	GTW / TW (lbs.)	WD / WDTW (lbs.)
Chevrolet							
Astro	Extended chassis	85 - 05	1.25	12923	4, 5	3.5 / 350	--
			2	13900	4, 5	5.0 / 500	--
Blazer	--	92 - 94	2	13900	4	5.0 / 500	--
		83 - 94	1.25	12923	4	3.5 / 350	--
	Full-size	80 - 91	2	13900	4	5.0 / 500	--
C/K 1500	Excluding stepside and king cab	62 - 99	1.25	12923	4	3.5 / 350	--
	8' bed	88 - 99	2	13900	4	5.0 / 500	--
	8' bed, excluding stepside	62 - 87	2	13900	4	5.0 / 500	--
			2	15511	2	15 / 1500	16 / 1600
			2	15510	1	15 / 1500	16 / 1600
C/K 2500	Excluding stepside and king cab	62 - 99	1.25	12923	4	3.5 / 350	--
	8' bed	88 - 99	2	13900	4	5.0 / 500	--
	8' bed, excluding stepside	62 - 87	2	13900	4	5.0 / 500	--
			2	15511	2	15 / 1500	16 / 1600
			2	15510	1	15 / 1500	16 / 1600
	Cab & chassis	88 - 99	2	15510	1	15 / 1500	16 / 1600
			2	15511	2	15 / 1500	16 / 1600
C/K 3500	8' bed	62 - 87	2	15510	1	15 / 1500	16 / 1600
			2	15511	2	15 / 1500	16 / 1600
	Cab & chassis	88 - 99	2	15510	1	15 / 1500	16 / 1600
			2	15511	2	15 / 1500	16 / 1600
Express	Full-size van	96 - 24	2	13900	4	5.0 / 500	--
G-Series	Full-size van	78 - 96	2	13900	4	5.0 / 500	--
S10	4WD, short bed	98 - 04	2	13900	4	5.0 / 500	--
	Long bed, excluding Baja	83 - 04	1.25	12923	4	3.5 / 350	--
			2	13900	4	5.0 / 500	--
Silverado 1500	--	99 - 18	2	13901*	--	5.0 / 500	7.5 / 750
			2	13902	--	8.0 / 800	12 / 1200
	8' bed	99 - 06	2	13900	4	5.0 / 500	--
Silverado 1500 Classic	--	07 - 07	2	13901*	--	5.0 / 500	7.5 / 750
			2	13902	--	8.0 / 800	12 / 1200
	8' bed	07 - 07	2	13900	4	5.0 / 500	--
Silverado 1500 HD	--	05 - 06	2	13901*	--	5.0 / 500	7.5 / 750
		01 - 03	2	13901*	--	5.0 / 500	7.5 / 750
Silverado 1500 HD Classic	--	07 - 07	2	13901*	--	5.0 / 500	7.5 / 750
Silverado 1500 LD	--	19 - 19	2	13901*	--	5.0 / 500	7.5 / 750
			2	13902	--	8.0 / 800	12 / 1200
Silverado 2500	--	99 - 04	2	13901*	--	5.0 / 500	7.5 / 750
			2	13902	--	8.0 / 800	12 / 1200
	8' bed	99 - 04	2	13900	4	5.0 / 500	--
Silverado 2500 HD	--	01 - 19	2	13902	--	8.0 / 800	12 / 1200
		01 - 14	2	13901*	--	5.0 / 500	7.5 / 750
	8' bed	01 - 06	2	13900	4	5.0 / 500	--
Silverado 2500 HD Classic	--	07 - 07	2	13901*	--	5.0 / 500	7.5 / 750
			2	13902	--	8.0 / 800	12 / 1200
	8' bed	07 - 07	2	13900	4	5.0 / 500	--

1. Receiver tube drops 5-1/2" on the rear of the vehicle
2. Receiver tube drops 7-1/2" on the rear of the vehicle
3. Two sets of mounting brackets included, only one set will be used based on application
4. Adjustable frame
5. Spare tire may need relocating
6. Excluding 20" spare tire

* Continued while supplies last

Applications continued on the following page

Make / Model	Style	Years	Rec. Size	Part #	Foot Notes	GTW / TW (lbs.)	WD / WDTW (lbs.)
Chevrolet (continued)							
Silverado 3500	--	01 - 06	2	13901*	--	5.0 / 500	7.5 / 750
			2	13902	--	8.0 / 800	12 / 1200
	8' bed	01 - 06	2	13900	4	5.0 / 500	--
Silverado 3500 Classic	--	07 - 07	2	13901*	--	5.0 / 500	7.5 / 750
			2	13902	--	8.0 / 800	12 / 1200
	8' bed	01 - 07	2	13900	4	5.0 / 500	--
Silverado 3500 HD	--	07 - 19	2	13902	--	8.0 / 800	12 / 1200
		07 - 14	2	13901*	--	5.0 / 500	7.5 / 750
Suburban	--	92 - 06	1.25	12923	4	3.5 / 350	--
			2	13900	4	5.0 / 500	--
Tahoe	--	95 - 06	2	13900	4	5.0 / 500	--
Venture	--	97 - 04	1.25	12923	4	3.5 / 350	--
			2	13900	4	5.0 / 500	--
Chrysler							
Town & Country	Excl. Stow-n-Go	88 - 07	1.25	12923	4	3.5 / 350	--
			2	13900	4	5.0 / 500	--
Voyager	--	00 - 03	2	13900	4	5.0 / 500	--
Dodge							
Caravan	Excl. Stow-n-Go	88 - 07	1.25	12923	4	3.5 / 350	--
			2	13900	4	5.0 / 500	--
Dakota	--	86 - 04	1.25	12923	4	3.5 / 350	--
			2	13900	4	5.0 / 500	--
D/W Series Pickups	Excluding 1-ton	62 - 87	2	13900	4	5.0 / 500	--
	--	72 - 93	2	15510	1	15 / 1500	16 / 1600
			2	15511	2	15 / 1500	16 / 1600
Ram 1500	--	02 - 10	2	13902	--	8.0 / 800	12 / 1200
		94 - 01	1.25	12923	4	3.5 / 350	--
Ram 2500	--	03 - 10	2	13902	--	8.0 / 800	12 / 1200
		94 - 01	1.25	12923	4	3.5 / 350	--
Ram 3500	--	03 - 10	2	13902	--	8.0 / 800	12 / 1200
		94 - 01	1.25	12923	4	3.5 / 350	--
Ramcharger	--	78 - 93	1.25	12923	4	3.5 / 350	--
			2	13900	4	5.0 / 500	--
Ford							
Aerostar	Extended chassis	86 - 97	2	13900	4	5.0 / 500	--
Bronco	--	78 - 97	1.25	12923	4	3.5 / 350	--
			2	13900	4	5.0 / 500	--
Bronco II	--	84 - 90	1.25	12923	4	3.5 / 350	--
			2	13900	4	5.0 / 500	--
Escape	--	01 - 04	2	13900	4	5.0 / 500	--
E-150	--	03 - 14	2	13900	4	5.0 / 500	--
E-150 Econoline	--	80 - 98	1.25	12923	4	3.5 / 350	--
		80 - 02	2	13900	4	5.0 / 500	--
E-250	--	03 - 14	2	13900	4	5.0 / 500	--
E-250 Econoline	--	80 - 98	1.25	12923	4	3.5 / 350	--
		80 - 02	2	13900	4	5.0 / 500	--

1. Receiver tube drops 5-1/2" on the rear of the vehicle
2. Receiver tube drops 7-1/2" on the rear of the vehicle
3. Two sets of mounting brackets included, only one set will be used based on application
4. Adjustable frame
5. Spare tire may need relocating
6. Excluding 20" spare tire

* Continued while supplies last

Applications continued on the following page

Make / Model	Style	Years	Rec. Size	Part #	Foot Notes	GTW / TW (lbs.)	WD / WDTW (lbs.)
Ford (continued)							
F-100	--	67 - 83	2	15510	1	15 / 1500	16 / 1600
			2	15511	2	15 / 1500	16 / 1600
	Excluding flareside	67 - 83	1.25	12923	4	3.5 / 350	--
			2	13900	4	5.0 / 500	--
F-150	--	06 - 20	2	13903*	3	8.0 / 800	12 / 1200
		97 - 05	2	13901*	--	5.0 / 500	7.5 / 750
			2	13902	--	8.0 / 800	12 / 1200
	6' flareside bed	97 - 03	2	13900	4, 5	5.0 / 500	--
	8' bed	99 - 03	2	13900	4	5.0 / 500	--
	--	75 - 96	2	15510	1	15 / 1500	16 / 1600
			2	15511	2	15 / 1500	16 / 1600
	Excluding flareside	75 - 96	1.25	12923	4	3.5 / 350	--
			2	13900	4	5.0 / 500	--
F-150 Heritage	--	04 - 04	2	13901*	--	5.0 / 500	7.5 / 750
			2	13902	--	8.0 / 800	12 / 1200
F-250	--	97 - 99	2	13901*	--	5.0 / 500	7.5 / 750
		67 - 99	2	15510	1	15 / 1500	16 / 1600
			2	15511	2	15 / 1500	16 / 1600
	Excluding flareside	74 - 99	1.25	12923	4	3.5 / 350	--
			2	13900	4	5.0 / 500	--
F-250 Super Duty	--	99 - 16	2	13901*	--	5.0 / 500	7.5 / 750
			2	13902	--	8.0 / 800	12 / 1200
	8' bed	99 - 16	2	13900	4, 6	5.0 / 500	--
F-350	--	67 - 97	2	15510	1	15 / 1500	16 / 1600
			2	15511	2	15 / 1500	16 / 1600
F-350 Super Duty	8' bed	99 - 16	2	13900	4, 6	5.0 / 500	--
			2	13901*	--	5.0 / 500	7.5 / 750
			2	13902	--	8.0 / 800	12 / 1200
F-450 Super Duty	Crew cab	08 - 16	2	13901*	--	5.0 / 500	7.5 / 750
			2	13902	--	8.0 / 800	12 / 1200
	2WD, cab & chassis	99 - 07	2	15510	1	15 / 1500	16 / 1600
			2	15511	2	15 / 1500	16 / 1600
Ranger	--	83 - 11	1.25	12923	4	3.5 / 350	--
	Short bed, excluding flareside	83 - 06	2	13900	4	5.0 / 500	--
	Long bed	83 - 11	2	13900	4, 5	5.0 / 500	--
Windstar	--	99 - 03	2	13900	4	5.0 / 500	--

1. Receiver tube drops 5-1/2" on the rear of the vehicle
2. Receiver tube drops 7-1/2" on the rear of the vehicle
3. Two sets of mounting brackets included, only one set will be used based on application
4. Adjustable frame
5. Spare tire may need relocating
6. Excluding 20" spare tire

* Continued while supplies last

Applications continued on the following page

Make / Model	Style	Years	Rec. Size	Part #	Foot Notes	GTW / TW (lbs.)	WD / WDTW (lbs.)
GMC							
C/K 1500	Excluding stepside and king cab	62 - 99	1.25	12923	4	3.5 / 350	--
	8' bed	88 - 99	2	13900	4	5.0 / 500	--
	8' bed, excluding stepside	62 - 87	2	13900	4	5.0 / 500	--
			2	15511	2	15 / 1500	16 / 1600
			2	15510	1	15 / 1500	16 / 1600
C/K 2500	Excluding stepside and king cab	62 - 99	1.25	12923	4	3.5 / 350	--
	8' bed	88 - 99	2	13900	4	5.0 / 500	--
	8' bed, excluding stepside	62 - 87	2	13900	4	5.0 / 500	--
			2	15511	2	15 / 1500	16 / 1600
			2	15510	1	15 / 1500	16 / 1600
	Cab & chassis	88 - 99	2	15510	1	15 / 1500	16 / 1600
			2	15511	2	15 / 1500	16 / 1600
C/K 3500	8' bed	62 - 87	2	15510	1	15 / 1500	16 / 1600
			2	15511	2	15 / 1500	16 / 1600
	Cab & chassis	88 - 99	2	15510	1	15 / 1500	16 / 1600
			2	15511	2	15 / 1500	16 / 1600
G-Series	Full-size van	78 - 96	2	13900	4	5.0 / 500	--
Jimmy	--	92 - 94	2	13900	4	5.0 / 500	--
		83 - 94	1.25	12923	4	3.5 / 350	--
	Full-size	80 - 91	2	13900	4	5.0 / 500	--
Safari	Extended chassis	85 - 05	1.25	12923	4, 5	3.5 / 350	--
			2	13900	4, 5	5.0 / 500	--
Savana	Full-size van	96 - 24	2	13900	4	5.0 / 500	--
Sierra 1500	--	99 - 18	2	13901*	--	5.0 / 500	7.5 / 750
			2	13902	--	8.0 / 800	12 / 1200
	8' bed	99 - 06	2	13900	4	5.0 / 500	--
Sierra 1500 Classic	--	07 - 07	2	13901*	--	5.0 / 500	7.5 / 750
			2	13902	--	8.0 / 800	12 / 1200
	8' bed	07 - 07	2	13900	4	5.0 / 500	--
Sierra 1500 HD	--	05 - 06	2	13901*	--	5.0 / 500	7.5 / 750
		01 - 03	2	13901*	--	5.0 / 500	7.5 / 750
Sierra 1500 HD Classic	--	07 - 07	2	13901*	--	5.0 / 500	7.5 / 750
Sierra 1500 Limited	--	19 - 19	2	13901*	--	5.0 / 500	7.5 / 750
			2	13902	--	8.0 / 800	12 / 1200
Sierra 2500	--	99 - 04	2	13901*	--	5.0 / 500	7.5 / 750
			2	13902	--	8.0 / 800	12 / 1200
	8' bed	99 - 04	2	13900	4	5.0 / 500	--
Sierra 2500 HD	--	01 - 19	2	13902	--	8.0 / 800	12 / 1200
		01 - 14	2	13901*	--	5.0 / 500	7.5 / 750
	8' bed	01 - 06	2	13900	4	5.0 / 500	--
Sierra 2500 HD Classic	--	07 - 07	2	13901*	--	5.0 / 500	7.5 / 750
			2	13902	--	8.0 / 800	12 / 1200
	8' bed	07 - 07	2	13900	4	5.0 / 500	--
Sierra 3500	--	01 - 06	2	13901*	--	5.0 / 500	7.5 / 750
			2	13902	--	8.0 / 800	12 / 1200
	8' bed	01 - 06	2	13900	4	5.0 / 500	--

1. Receiver tube drops 5-1/2" on the rear of the vehicle
2. Receiver tube drops 7-1/2" on the rear of the vehicle
3. Two sets of mounting brackets included, only one set will be used based on application
4. Adjustable frame
5. Spare tire may need relocating
6. Excluding 20" spare tire

* Continued while supplies last

Applications continued on the following page

Make / Model	Style	Years	Rec. Size	Part #	Foot Notes	GTW / TW (lbs.)	WD / WDTW (lbs.)
GMC (continued)							
Sierra 3500 Classic	--	07 - 07	2	13901*	--	5.0 / 500	7.5 / 750
			2	13902	--	8.0 / 800	12 / 1200
	8' bed	01 - 07	2	13900	4	5.0 / 500	--
Sierra 3500 HD	--	07 - 19	2	13902	--	8.0 / 800	12 / 1200
		07 - 14	2	13901*	--	5.0 / 500	7.5 / 750
Sonoma	4WD, short bed	98 - 04	2	13900	4	5.0 / 500	--
	Long bed	83 - 04	1.25	12923	4	3.5 / 350	--
			2	13900	4	5.0 / 500	--
Suburban	--	92 - 99	1.25	12923	4	3.5 / 350	--
			2	13900	4	5.0 / 500	--
Yukon	--	92 - 06	2	13900	4	5.0 / 500	--
Yukon XL 1500 / 2500	--	00 - 06	2	13900	4	5.0 / 500	--
Isuzu							
Hombre	4WD	98 - 00	2	13900	4	5.0 / 500	--
Jeep							
Cherokee XJ	--	84 - 01	2	13900	4	5.0 / 500	--
Grand Cherokee	--	93 - 98	2	13900	4	5.0 / 500	--
Liberty	--	02 - 06	2	13900	4	5.0 / 500	--
Wagoneer	--	87 - 90	1.25	12923	4	3.5 / 350	--
Mazda							
Pickup	--	90 - 06	2	13900	4	5.0 / 500	--
Tribute	--	01 - 04	2	13900	4	5.0 / 500	--
Nissan							
Frontier	4.5' or 6.25' bed	87 - 04	2	13900	4	5.0 / 500	--
Pickup	4.5' bed	87 - 04	2	13900	4	5.0 / 500	--
	6' bed	87 - 94	1.25	12923	4	3.5 / 350	--
		87 - 04	2	13900	4	5.0 / 500	--
Oldsmobile							
Bravada	--	91 - 94	1.25	12923	4	3.5 / 350	--
Silhouette	--	97 - 05	1.25	12923	4	3.5 / 350	--
Plymouth							
Trail Duster	--	74 - 91	1.25	12923	4	3.5 / 350	--
			2	13900	4	5.0 / 500	--
Voyager	--	88 - 98	1.25	12923	4	3.5 / 350	--
		84 - 03	2	13900	4	5.0 / 500	--
Pontiac							
6000	--	82 - 84	1.25	12923	4	3.5 / 350	--
Montana	--	99 - 06	1.25	12923	4	3.5 / 350	--
Trans Sport	--	97 - 98	1.25	12923	4	3.5 / 350	--
Ram							
1500	--	11 - 18	2	13902	--	8.0 / 800	12 / 1200
1500 Classic	--	19 - 23	2	13902	--	8.0 / 800	12 / 1200
2500 / 3500	--	11 - 19	2	13902	--	8.0 / 800	12 / 1200
Toyota							
Pickup	6' bed, excluding T100	87 - 95	1.25	12923	4	3.5 / 350	--
	8' bed, excluding T100	87 - 94	2	13900	4	5.0 / 500	--
Tundra	--	00 - 06	2	13900	4	5.0 / 500	--

1. Receiver tube drops 5-1/2" on the rear of the vehicle
2. Receiver tube drops 7-1/2" on the rear of the vehicle
3. Two sets of mounting brackets included, only one set will be used based on application
4. Adjustable frame
5. Spare tire may need relocating
6. Excluding 20" spare tire

* Continued while supplies last

2 INCH UNIVERSAL WELD-ON TRAILER HITCHES

- Compatible with most service body trucks and other large pickup trucks
- Adjustable frame fits a variety of vehicles (side plates do not come pre-welded)
- Class 5 ratings with capacities available up to 20,000 lbs. Side plates must be welded 42" apart or less to achieve 20K rating (select models)
- Weld locations must be sanded prior to welding for optimal strength
- Co-cured in a rust-resistant liquid A-coat
- Protected by a durable gloss black powder coat finish
- Protected by a durable carbide black powder coat finish (#15901, #15902, #15903 only)
- Tested for safety in accordance with SAE J684
- Limited lifetime warranty (see last page for details)

15921

15923

15924

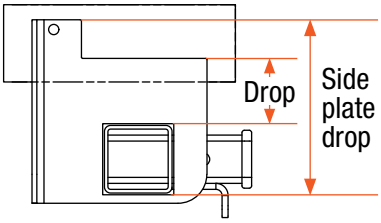

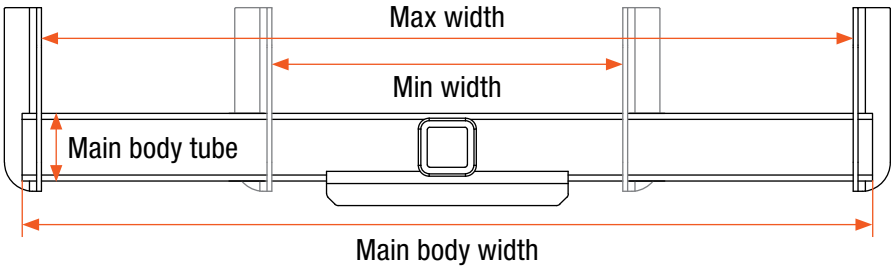

Part #	GTW	Receiver Tube Size	Main Body Width	Main Body Tube	Side Plate Drop	Drop	Max Width	Min Width	Finish
15901	15,000 lbs.	2"	45"	4" x 4"	9-1/2"	3-1/8"	43"	18"	Carbide black
15902	15,000 lbs.	2"	45"	4" x 4"	18"	11-1/2"	43"	18"	Carbide black
15903	15,000 lbs.	2"	62"	4" x 4"	18"	11-1/2"	60"	18"	Carbide black
15920	16,000 lbs.	2"	44"	3-1/2" x 3-1/2"	Not included	--	--	--	Gloss black
15927	16,000 lbs.	2"	44"	3-1/2" x 3-1/2"	9"	3 1/8"	42"	18"	Gloss black
15928	16,000 lbs.	2"	44"	3-1/2" x 3-1/2"	18"	11-1/2"	42"	18"	Gloss black
15921*	20,000 lbs.	2-1/2"	44"	3-1/2" x 3-1/2"	Not included	--	--	--	Gloss black
15923*	20,000 lbs.	2-1/2"	44"	3-1/2" x 3-1/2"	9"	3-1/4"	42"	18"	Gloss black
15924*	20,000 lbs.	2-1/2"	44"	3-1/2" x 3-1/2"	18"	11-1/2"	42"	18"	Gloss black
15922*	20,000 lbs.	2-1/2"	62"	3-1/2" x 3-1/2"	Not included	--	--	--	Gloss black
15925*	20,000 lbs.	2-1/2"	62"	3-1/2" x 3-1/2"	9"	3-1/4"	60"	18"	Gloss black
15926*	20,000 lbs.	2-1/2"	62"	3-1/2" x 3-1/2"	18"	11-1/2"	60"	18"	Gloss black

*Side plates must be welded 42" apart or less to achieve 20K rating

2 INCH ADJUSTABLE RV TRAILER HITCHES

- Co-cured in a rust-resistant liquid A-coat and protected by a gloss black powder coat finish
- May include imported installation hardware
- Limited lifetime warranty (see last page for details)

Designed for towing a trailer or small vehicle behind an RV

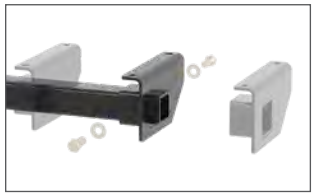

Three-piece, adjustable design fits multiple frame sizes

13704

Part #	GTW / TW	WD / WDTW	Frame	Drop
13701	5,000 / 500 lbs.	6,000 / 600 lbs.	Fits box frames up to 51" wide	2"
13702	5,000 / 500 lbs.	6,000 / 600 lbs.	Fits box frames up to 51" wide	--
13704	5,000 / 500 lbs.	--	Fits box frames up to 66" wide	--
13703	3,500 / 350 lbs.	--	Fits box, C-channel and I-beam frames up to 72" wide	--

2 INCH RV BUMPER HITCHES

- Includes safety chain hookups and imported grade 8 mounting hardware
- Limited lifetime warranty (see last page for details)

Pkg #	GTW / TW	Fits
19100	3,500 / 350 lbs.	4" x 4" channel bumpers
19101	3,500 / 350 lbs.	2" x 4" channel bumpers

19100

19101

FISH WIRE

- Makes it easier to lead bolts and spacers through tough-to-reach holes
- Ideal for installing a trailer hitch on a vehicle with a hollow frame
- Coiled end accepts threaded bolts

58390 58410 58400 58430

Part #	Length	Coil Diameter	Material
58390	18"	3/8"	Spring steel
58410	18"	7/16"	Spring steel
58400	18"	1/2"	Spring steel
58430	18"	5/8"	Spring steel

Ideal for installing a trailer hitch on a vehicle with a hollow frame

Makes it easier to lead hardware through tough-to-reach holes

ADD MORE FUNCTIONALITY TO YOUR VEHICLE

MADE IN USA

2 INCH

FRONT MOUNT HITCHES

Scan for current applications or visit curtmfg.com

- 2" x 2" receiver tube opening
- Up to 5,000 lbs. GTW / 500 lbs. TW
- Compatible with a tow hook or shackle mount (9,000 lbs. straight-line pull)
- Allows for easy maneuvering of a trailer into a tight spot
- Tested for safety in accordance with SAE J684
- Precisely welded for superior strength and fit
- May include imported installation hardware (grade-8)
- Limited lifetime warranty (see last page for details)

Ideal for attaching a snow plow, cargo carrier or other front hitch mount accessories

Make / Model	Style	Years	Part #	Foot Notes	GTW / TW (lbs.)	Price Code	Install Time	Main Body
Buick								
Rainier	--	04 - 07	31055	D,●	3,500 / 350	77	45	Exposed
Cadillac								
Escalade	Excl. Hybrid	07 - 20	31012	D	5,000 / 500	51	45	Concealed
	--	00 - 06	31302	D,●	5,000 / 500	65	60	Concealed
Escalade EXT	--	07 - 13	31012	D	5,000 / 500	51	45	Concealed
Chevrolet								
Avalanche	Excl. Z71	07 - 13	31012	D	5,000 / 500	51	45	Concealed
Avalanche 1500	--	02 - 06	31302	D,●	5,000 / 500	65	60	Concealed
Avalanche 2500	--	02 - 06	31302	D,●	5,000 / 500	65	60	Concealed
Blazer	4WD, excluding ZR2	96 - 04	31021	●	3,500 / 350	27	30	Exposed
	--	92 - 94	31042	●	5,000 / 500	37	30	Concealed
C1500	--	88 - 99	31042	●	5,000 / 500	37	30	Concealed
C1500 Suburban	--	92 - 99	31043	--	5,000 / 500	45	30	Exposed
C2500	--	88 - 00	31043	--	5,000 / 500	45	30	Exposed
C2500 Suburban	--	92 - 99	31043	--	5,000 / 500	45	30	Exposed

● = No drilling required
D = Minor fascia trim

* Continued while supplies last

Applications continued on the following page

Make / Model	Style	Years	Part #	Foot Notes	GTW / TW (lbs.)	Price Code	Install Time	Main Body
Chevrolet (continued)								
C3500	--	88 - 00	31043	--	5,000 / 500	45	30	Exposed
Colorado	Excl. ZR2	15 - 22	31074	D,●	5,000 / 500	37	45	Concealed
	Excl. Z71 with front stabilizer bar	10 - 12	31221	D,●	5,000 / 500	56	30	Concealed
	--	04 - 09	31221	D,●	5,000 / 500	56	30	Concealed
Express 1500	--	96 - 03	31016	--	5,000 / 500	25	35	Exposed
Express 2500	--	96 - 03	31016	--	5,000 / 500	25	35	Exposed
Express 3500	--	96 - 03	31016	--	5,000 / 500	25	35	Exposed
K1500	--	88 - 99	31042	●	5,000 / 500	37	30	Concealed
K1500 Suburban	--	92 - 99	31042	●	5,000 / 500	37	30	Concealed
K2500	--	88 - 00	31042	●	5,000 / 500	37	30	Concealed
K2500 Suburban	--	92 - 99	31042	●	5,000 / 500	37	30	Concealed
K3500	--	88 - 00	31042	●	5,000 / 500	37	30	Concealed
S10	4WD, excluding ZR2	94 - 04	31021	●	3,500 / 350	27	30	Exposed
Silverado 1500	Excl. LTZ, High Country, ZR2, or diesel	22 - 24	31092	--	5,000 / 500	43	60	Concealed
	Excl. 2.7L or 3.0L	19 - 21	31088	●	5,000 / 500	43	30	Concealed
	--	14 - 18	31069	D	5,000 / 500	37	45	Concealed
		14 - 18	31012	D	5,000 / 500	51	45	Concealed
		07 - 13	31322	D,●	5,000 / 500	45	30	Concealed
		99 - 06	31302	D,●	5,000 / 500	65	60	Concealed
Silverado 1500 Classic	--	07 - 07	31302	D,●	5,000 / 500	65	60	Concealed
Silverado 1500 HD	--	01 - 06	31108	D,●	5,000 / 500	45	30	Concealed
Silverado 1500 HD Classic	--	07 - 07	31108	D,●	5,000 / 500	45	30	Concealed
Silverado 1500 LD	--	19 - 19	31069	D	5,000 / 500	37	45	Concealed
		19 - 19	31012	D	5,000 / 500	51	45	Concealed
Silverado 1500 LTD	Excl. 2.7L or 3.0L	22 - 22	31088	●	5,000 / 500	43	30	Concealed
Silverado 2500	--	99 - 04	31108	D,●	5,000 / 500	45	30	Concealed
Silverado 2500 HD	--	20 - 24	31091	●	5,000 / 500	35	60	Concealed
		15 - 19	31071	●	5,000 / 500	35	30	Concealed
		11 - 14	31023	D,●	5,000 / 500	17	30	Concealed
		07 - 10	31109	●	5,000 / 500	37	30	Concealed
		01 - 06	31108	D,●	5,000 / 500	45	30	Concealed
Silverado 2500 HD Classic	--	07 - 07	31108	D,●	5,000 / 500	45	30	Concealed
Silverado 3500	--	01 - 06	31108	D,●	5,000 / 500	45	30	Concealed
Silverado 3500 Classic	--	07 - 07	31108	D,●	5,000 / 500	45	30	Concealed
Silverado 3500 HD	--	20 - 24	31091	●	5,000 / 500	35	60	Concealed
		15 - 19	31071	●	5,000 / 500	35	30	Concealed
		11 - 14	31023	D,●	5,000 / 500	17	30	Concealed
		08 - 10	31109	●	5,000 / 500	37	30	Concealed
Suburban	--	15 - 20	31073	D	5,000 / 500	35	45	Concealed
Suburban 1500	--	07 - 14	31012	D	5,000 / 500	51	45	Concealed
		00 - 06	31302	D,●	5,000 / 500	65	60	Concealed
Suburban 2500	--	01 - 06	31108	D,●	5,000 / 500	45	30	Concealed
Tahoe	Excl. PPV or SSV	15 - 20	31073	D	5,000 / 500	35	45	Concealed
	Excl. Hybrid	07 - 14	31012	D	5,000 / 500	51	45	Concealed
	--	00 - 06	31302	D,●	5,000 / 500	65	60	Concealed
		95 - 99	31042	●	5,000 / 500	37	30	Concealed
Trailblazer	--	02 - 09	31055	D,●	3,500 / 350	77	45	Exposed

● = No drilling required
D = Minor fascia trim

* Continued while supplies last

Applications continued on the following page

Make / Model	Style	Years	Part #	Foot Notes	GTW / TW (lbs.)	Price Code	Install Time	Main Body
Dodge								
Dakota	4WD	00 - 04	31080	●	3,500 / 350	71	40	Concealed
Durango	Excl. SRT	11 - 22	31033	D	3,000 / 300	67	35	Concealed
	--	00 - 03	31080	●	3,500 / 350	71	40	Concealed
Ram 1500	4WD	09 - 10	31374	D	5,000 / 500	39	30	Concealed
	Extended Crew Cab	06 - 08	31017	D	3,500 / 350	49	30	Exposed
	Excl. Extended Crew Cab	06 - 08	31320	D,●	5,000 / 500	63	30	Concealed
	--	02 - 05	31320	D,●	5,000 / 500	63	30	Concealed
	Excl. Sport	94 - 01	31604		5,000 / 500	61	45	Concealed
Ram 2500	4WD	10 - 10	31015	D,●	5,000 / 500	46	30	Concealed
	--	03 - 09	31017	D	3,500 / 350	49	30	Exposed
		94 - 02	31604	--	5,000 / 500	61	45	Concealed
Ram 3500	Excl. Laramie	03 - 09	31017	D	3,500 / 350	49	30	Exposed
	--	94 - 02	31604	--	5,000 / 500	61	45	Concealed
Ford								
E-150	--	08 - 14	31053	D	5,000 / 500	33	30	Exposed
		03 - 07	33055	--	5,000 / 500	33	30	Concealed
E-150 Econoline	--	91 - 02	33055	--	5,000 / 500	33	30	Concealed
E-250	--	08 - 14	31053	D	5,000 / 500	33	30	Exposed
		03 - 07	33055	--	5,000 / 500	33	30	Concealed
E-250 Econoline	--	91 - 02	33055	--	5,000 / 500	33	30	Concealed
E-350 Econoline	--	91 - 98	33055	--	5,000 / 500	33	30	Concealed
E-350 Super Duty	--	08 - 14	31053	D	5,000 / 500	33	30	Exposed
		99 - 07	33055	--	5,000 / 500	33	30	Concealed
Excursion	--	00 - 05	31114	●	5,000 / 500	71	60	Concealed
Expedition	--	18 - 20	31083	●	5,000 / 500	45	30	Concealed
		09 - 17	31068	D,●	5,000 / 500	56	30	Exposed
	4WD with Factory Tow Hooks	03 - 06	31352	D,●	5,000 / 500	56	30	Concealed
		99 - 02	31038	●	5,000 / 500	46	45	Concealed
		97 - 98	31049	●	5,000 / 500	45	30	Concealed
Explorer	Excl. 2.0L EcoBoost	11 - 16	31052	D	3,500 / 350	78	30	Exposed
	--	07 - 10	31545	●	5,000 / 500	69	30	Concealed
	Excl. Sport	02 - 06	31540	D	5,000 / 500	37	30	Concealed
	--	97 - 01	31051*	--	3,500 / 350	77	30	Concealed
Explorer Sport Trac	--	07 - 10	31545	●	5,000 / 500	69	30	Concealed
		01 - 05	31029	--	5,000 / 500	55	30	Exposed
		01 - 05	31407*	●	3,500 / 350	51	30	Exposed
F-150	Excl. automatic deploying air dam	15 - 21	31083	●	5,000 / 500	45	30	Concealed
	--	09 - 14	31068	D,●	5,000 / 500	56	30	Exposed
		04 - 08	31352	D,●	5,000 / 500	56	30	Concealed
	4WD with Factory Tow Hooks	99 - 03	31038	●	5,000 / 500	46	45	Concealed
		97 - 98	31049	●	5,000 / 500	45	30	Concealed
	--	92 - 96	31026	--	5,000 / 500	63	30	Concealed
F-150 Heritage	4WD with Factory Tow Hooks	04 - 04	31038	●	5,000 / 500	46	45	Concealed
F-250	4WD with Factory Tow Hooks	99 - 99	31038	●	5,000 / 500	46	45	Concealed
		97 - 98	31049	●	5,000 / 500	45	30	Concealed
	4WD	92 - 97	31310	●	5,000 / 500	37	30	Concealed

● = No drilling required
D = Minor fascia trim

* Continued while supplies last

Applications continued on the following page

Make / Model	Style	Years	Part #	Foot Notes	GTW / TW (lbs.)	Price Code	Install Time	Main Body
Ford (continued)								
F-250 Super Duty	--	17 - 24	31078	D,●	5,000 / 500	49	30	Concealed
	4WD	11 - 16	31018	D,●	5,000 / 500	55	45	Concealed
	--	08 - 10	31008	D,●	5,000 / 500	37	30	Concealed
		04 - 07	31114	●	5,000 / 500	71	60	Concealed
	Without Blocker Beam	99 - 03	31114	●	5,000 / 500	71	60	Concealed
	With Blocker Beam	99 - 03	31014	--	5,000 / 500	71	45	Concealed
F-350	4WD	92 - 97	31310	●	5,000 / 500	37	30	Concealed
F-350 Super Duty	Excl. dual rear wheels	17 - 24	31078	D,●	5,000 / 500	49	30	Concealed
	--	17 - 19	31078	D,●	5,000 / 500	49	30	Concealed
	4WD	11 - 16	31018	D,●	5,000 / 500	55	45	Concealed
	--	08 - 10	31008	D,●	5,000 / 500	37	30	Concealed
		04 - 07	31114	●	5,000 / 500	71	60	Concealed
	Without Blocker Beam	99 - 03	31114	●	5,000 / 500	71	60	Concealed
	With Blocker Beam	99 - 03	31014	--	5,000 / 500	71	45	Concealed
F-450 Super Duty	--	17 - 19	31078	D,●	5,000 / 500	49	30	Concealed
		08 - 10	31008	D,●	5,000 / 500	37	30	Concealed
		99 - 07	31114	●	5,000 / 500	71	60	Concealed
F-550 Super Duty	--	08 - 10	31008	D,●	5,000 / 500	37	30	Concealed
		99 - 07	31114	●	5,000 / 500	71	60	Concealed
Ranger	Excl. models with front cross member and Canadian built 2WD models	92 - 11	31063	D	3,500 / 350	63	30	Concealed
GMC								
C1500	--	88 - 99	31042	●	5,000 / 500	37	30	Concealed
C1500 Suburban	--	92 - 99	31043	--	5,000 / 500	45	30	Exposed
C2500	--	88 - 00	31043	--	5,000 / 500	45	30	Exposed
C2500 Suburban	--	92 - 99	31043	--	5,000 / 500	45	30	Exposed
C3500	--	88 - 00	31043	--	5,000 / 500	45	30	Exposed
Canyon	--	15 - 22	31074	D,●	5,000 / 500	37	45	Concealed
	Excl. Z71 with front stabilizer bar	10 - 12	31221	D,●	5,000 / 500	56	30	Concealed
	--	04 - 09	31221	D,●	5,000 / 500	56	30	Concealed
Envoy	--	02 - 09	31055	D,●	3,500 / 350	77	45	Exposed
Jimmy	4WD	94 - 01	31021	●	3,500 / 350	27	30	Exposed
K1500	--	88 - 99	31042	●	5,000 / 500	37	30	Concealed
K1500 Suburban	--	92 - 99	31042	●	5,000 / 500	37	30	Concealed
K2500	--	88 - 00	31042	●	5,000 / 500	37	30	Concealed
K2500 Suburban	--	92 - 99	31042	●	5,000 / 500	37	30	Concealed
K3500	--	88 - 00	31042	●	5,000 / 500	37	30	Concealed
Savana 1500	--	96 - 03	31016	--	5,000 / 500	25	35	Exposed
Savana 2500	--	96 - 03	31016	--	5,000 / 500	25	35	Exposed
Savana 3500	--	96 - 03	31016	--	5,000 / 500	25	35	Exposed
Sierra 1500	Excl. AT4, AT4X, Denali, Elevation, or diesel	22 - 24	31092	--	5,000 / 500	43	60	Concealed
	Excl. 2.7L, 3.0L, or Elevation	19 - 21	31088	●	5,000 / 500	43	30	Concealed
	--	14 - 18	31069	D	5,000 / 500	37	45	Concealed
		14 - 18	31012	D	5,000 / 500	51	45	Concealed
		07 - 13	31322	D,●	5,000 / 500	45	30	Concealed
		99 - 06	31302	D,●	5,000 / 500	65	60	Concealed
Sierra 1500 Classic	--	07 - 07	31302	D,●	5,000 / 500	65	60	Concealed
Sierra 1500 HD	--	01 - 06	31108	D,●	5,000 / 500	45	30	Concealed
Sierra 1500 HD Classic	--	07 - 07	31108	D,●	5,000 / 500	45	30	Concealed

● = No drilling required
D = Minor fascia trim

* Continued while supplies last

Applications continued on the following page

Make / Model	Style	Years	Part #	Foot Notes	GTW / TW (lbs.)	Price Code	Install Time	Main Body
GMC (continued)								
Sierra 1500 Limited	Excl. 2.7L, 3.0L, or Elevation	22 - 22	31088	●	5,000 / 500	43	30	Concealed
	--	19 - 19	31069	D	5,000 / 500	37	45	Concealed
		19 - 19	31012	D	5,000 / 500	51	45	Concealed
Sierra 2500	--	99 - 04	31108	D,●	5,000 / 500	45	30	Concealed
Sierra 2500 HD	--	20 - 24	31091	●	5,000 / 500	35	60	Concealed
		15 - 19	31071	●	5,000 / 500	35	30	Concealed
		11 - 14	31023	D,●	5,000 / 500	17	30	Concealed
		07 - 10	31109	●	5,000 / 500	37	30	Concealed
		01 - 06	31108	D,●	5,000 / 500	45	30	Concealed
Sierra 2500 HD Classic	--	07 - 07	31108	D,●	5,000 / 500	45	30	Concealed
Sierra 3500	--	01 - 06	31108	D,●	5,000 / 500	45	30	Concealed
Sierra 3500 Classic	--	07 - 07	31108	D,●	5,000 / 500	45	30	Concealed
Sierra 3500 HD	--	20 - 24	31091	●	5,000 / 500	35	60	Concealed
		15 - 19	31071	●	5,000 / 500	35	30	Concealed
		11 - 14	31023	D,●	5,000 / 500	17	30	Concealed
		07 - 10	31109	●	5,000 / 500	37	30	Concealed
Sonoma	4WD	94 - 04	31021	●	3,500 / 350	27	30	Exposed
Yukon	--	15 - 20	31073	D	5,000 / 500	35	45	Concealed
	Excl. Hybrid	07 - 14	31012	D	5,000 / 500	51	45	Concealed
	--	00 - 06	31302	D,●	5,000 / 500	65	60	Concealed
		92 - 99	31042	●	5,000 / 500	37	30	Concealed
Yukon XL	--	15 - 20	31073	D	5,000 / 500	35	45	Concealed
Yukon XL 1500	--	00 - 06	31302	D,●	5,000 / 500	65	60	Concealed
Yukon XL 2500	--	01 - 06	31108	D,●	5,000 / 500	45	30	Concealed
Honda								
Pilot	--	12 - 15	31064*	--	3,500 / 350	67	60	Exposed
		03 - 08	33328	D,●	3,500 / 350	65	35	Exposed
Ridgeline	--	17 - 20	31082	D	5,000 / 500	51	30	Exposed
		06 - 14	33328	D,●	3,500 / 350	65	35	Exposed
Hummer								
H3	--	06 - 10	31270	●	3,000 / 300	56	30	Exposed
Jeep								
Cherokee	--	84 - 01	31084	D	3,000 / 300	25	30	Exposed
Comanche	--	86 - 92	31084	D	3,000 / 300	25	30	Exposed
Commander	4WD	06 - 10	31056*		3,500 / 350	77	45	Exposed
Gladiator	Excl. Mojave or Rubicon	20 - 23	31086	D,●	3,500 / 350	17	45	Concealed
Grand Cherokee	Excl. SRT, SRT8, Trailhawk, and models with factory tow hooks	11 - 17	31033	D	3,000 / 300	67	35	Concealed
	--	05 - 10	31047	--	3,000 / 300	61	90	Exposed
		02 - 04	31048	--	3,500 / 350	77	45	Concealed
Liberty	--	08 - 13	31020*	D	3,000 / 300	79	30	Concealed
		03 - 07	31022	--	3,500 / 350	49	30	Exposed
Wagoneer	Except Grand Wagoneer	84 - 90	31084	D	3,000 / 300	25	30	Exposed
Wrangler	JL, excluding Rubicon 392	18 - 24	31086	D,●	3,500 / 350	17	45	Concealed
	JK, with hard rock bumper	07 - 18	31433	●	3,500 / 350	59	30	Exposed
	JK, excluding Hard Rock and 75th Anniversary bumpers	07 - 18	31432	D,●	3,500 / 350	45	45	Concealed
	--	97 - 06	31028	--	3,500 / 350	43	30	Exposed
		87 - 06	31408	D,●	3,500 / 350	22	30	Exposed

● = No drilling required
D = Minor fascia trim

* Continued while supplies last

Applications continued on the following page

Make / Model	Style	Years	Part #	Foot Notes	GTW / TW (lbs.)	Price Code	Install Time	Main Body
Lincoln								
Mark LT	--	06 - 08	31352	D,●	5,000 / 500	56	30	Concealed
Navigator	--	09 - 17	31068	D,●	5,000 / 500	56	30	Exposed
Mercury								
Mountaineer	--	07 - 10	31545	●	5,000 / 500	69	30	Concealed
Nissan								
Armada	--	17 - 20	31081	●	5,000 / 500	78	30	Exposed
Frontier	--	05 - 20	31241	●	3,500 / 350	51	35	Exposed
NV1500	--	16 - 21	31077	●	5,000 / 500	43	30	Exposed
NV2500	--	16 - 21	31077	●	5,000 / 500	43	30	Exposed
NV3500	--	16 - 21	31077	●	5,000 / 500	43	30	Exposed
Pathfinder	--	05 - 12	31241	●	3,500 / 350	51	35	Exposed
Titan	4WD	09 - 15	31061	--	5,000 / 500	67	45	Exposed
	--	04 - 08	31199	--	5,000 / 500	61	45	Exposed
Titan XD	--	16 - 17	31077	●	5,000 / 500	43	30	Exposed
Xterra	--	05 - 15	31514	●	3,500 / 350	69	35	Exposed
Ram								
1500	Excl. Rebel or diesel	19 - 24	31090	●	5,000 / 500	51	30	Concealed
	4WD	11 - 18	31374	D	5,000 / 500	39	30	Concealed
1500 Classic	4WD, excluding Warlock	19 - 23	31374	D	5,000 / 500	39	30	Concealed
2500	--	19 - 24	31089	D,●	5,000 / 500	46	30	Concealed
	4WD	11 - 18	31015	D,●	5,000 / 500	46	30	Concealed
3500	4WD	13 - 18	31067	D,●	5,000 / 500	59	30	Concealed
Suzuki								
Equator	--	09 - 12	31241	●	3,500 / 350	51	35	Exposed
Toyota								
4Runner	--	14 - 21	31076	●	3,500 / 350	71	30	Exposed
	Limited	10 - 21	31054	●	3,500 / 350	69	30	Exposed
	SR5	10 - 13	31054	●	3,500 / 350	69	30	Exposed
	Trail	10 - 13	31367	●	3,500 / 350	69	30	Exposed
	--	07 - 09	31367	●	3,500 / 350	69	30	Exposed
FJ Cruiser	--	07 - 14	31367	●	3,500 / 350	69	30	Exposed
Land Cruiser	--	08 - 18	31198	●	5,000 / 500	37	30	Exposed
Sequoia	--	08 - 21	31198	●	5,000 / 500	37	30	Exposed
		01 - 07	31180	--	5,000 / 500	46	40	Exposed
Tacoma	--	16 - 23	31075	D,●	3,500 / 350	45	30	Exposed
		05 - 15	31313	●	3,500 / 350	71	35	Exposed
		01 - 04	31013	--	5,000 / 500	43	45	Exposed
Tundra	--	07 - 21	31198	●	5,000 / 500	37	30	Exposed
		00 - 06	31180	--	5,000 / 500	46	40	Exposed

● = No drilling required
D = Minor fascia trim

* Continued while supplies last

TRAILER HITCHES & CUSTOM WIRING
APPLICATION GUIDE

With over 1,000 different custom-fit hitch designs and over 400 custom wiring products, CURT has an application for virtually every vehicle on the road today. Our Application Guide makes it easy to locate the correct part for your customer's vehicle, simply using the make, model, style and year. For the most up-to-date fitment data, we also offer an online version at curtmfg.com.

CLASS 1 & 2 TRAILER HITCH ORDERING OPTIONS

Hitch only

With ball mount, pin & clip

Ordering Option	Add-On#	Example Order#
Hitch only	None	11290
Hitch with ball mount, pin & clip	3	112903

Scan for current applications or visit curtmfg.com

HOW TO CONFIRM VEHICLE MODEL YEAR

Each VIN (vehicle identification number) is unique and has become standard in all vehicles manufactured since 1981. Of this 17-digit number, the 10th digit represents the model year. Use the table below to find the year that corresponds with each letter or number. **Note:** A VIN will never contain the letters I (i), O (o), Q (q), U (u) or Z (z).

Example VIN tag

DATE: 06/24
FRONT GAWR: 3750LB
1701 KB WITH
P275 / 65R18 TIRES
18X7.5J RIMS
AT 240 KPO/35PSI COLD

GVWR 7200LB / 3266KG
REAR GAWR: 3850LB
1745KG WITH
P275/65R18 TIRES
18X7.5J RIMS
AT 240 KPO/35PSI COLD

THIS VEHICLE CONFORMS TO ALL APPLICABLE FEDERAL MOTOR VEHICLE SAFETY STANDARDS IN EFFECT ON THE DATE OF MANUFACTURE SHOWN ABOVE.

VIN: XXXXXXXXXRXXXXXXX
TYPE: TRUCK

R indicates a 2024 model year

VIN-to-year chart

Code	Year	Code	Year	Code	Year	Code	Year
A	1980	R	1994	8	2008	N	2022
B	1981	S	1995	9	2009	P	2023
C	1982	T	1996	A	2010	R	2024
D	1983	V	1997	B	2011	S	2025
E	1984	W	1998	C	2012	T	2026
F	1985	X	1999	D	2013	V	2027
G	1986	Y	2000	E	2014	W	2028
H	1987	1	2001	F	2015	X	2029
J	1988	2	2002	G	2016	Y	2030
K	1989	3	2003	H	2017	1	2031
L	1990	4	2004	J	2018	2	2032
M	1991	5	2005	K	2019	3	2033
N	1992	6	2006	L	2020	4	2034
P	1993	7	2007	M	2021	5	2035

TRAILER HITCH GUIDE FOOTNOTE KEY

Trailer Hitches Application Guide Footnote Key					
A	Allow additional installation time	H	Will not fit vehicles with twin tailpipes	R	Boxed due to bolt-on arms
AA	Main body concealed	HE	Hole enlargement required	S	May interfere w/ hands free liftgate sensors
B	Relocate or modify exhaust	I	Will not fit with full size spare	T	Minor modifications required
BB	Main body exposed	J	No spare tire relocation	TG	Compatible with Tommy Gate lifts
CC	Roll pan modification required	K	OEM-style hitch	U	May required battery removal
CF	Carbide black finish	L	Fixed draw bar	V	Under car trimming (not fascia) required
D	Minor fascia trim required	M	Round tube main body	VT	Vertical receiver tube
E	Noticeable fascia trim required	N	Continued while supplies last	W	Only vehicles with boxed rear bumper
F	Will not fit vehicles with ground effects	P	Not with roll pan bumper	X	158" WB models must remove brace 118" WB models must relocate spare tire
G	Add'l install w/ load level air compressors	Q	Temporary bumper removal	●	No drilling required

CUSTOM WIRING GUIDE FOOTNOTE KEY

Custom Wiring Application Guide Footnote Key					
T1	Multiple parts available. Visit curtmfg.com	T21	Excluding LTZ	T41	Excluding Hybrid Blue
T2	Replaces factory connector with 4-flat	T22	Excluding plug-in models	T42	Excluding SX
T3	Replaces factory connector with 6-way	T23	CX & CXL only	T43	V6 only
T4	Replaces factory connector with 7-way	T24	2-door	T44	Excluding WRX models
T5	Adds 4-flat to factory equipped 7-way	T25	Excluding Premier	T45	Excluding 2012 base model
T6	Without LED taillights	T26	Premier only	T46	Excluding GSR & R-Line models
T7	With LED taillights	T27	LTZ only	T47	Titanium only
T8	With factory tow package	T28	LX & Touring only	T48	S or SE only
T9	Without factory tow package	T29	Excluding LX & Touring	T49	Built in USA
T10	Hybrid only	T30	Excluding SE & SEL	T50	Built in Mexico
T11	Excluding hybrid	T31	SE & SEL only	T51	Excluding Canadian models
T12	Excluding EX and Limited	T32	Flareside bed	T52	With backup sensors
T13	Excluding right hand drive	T33	Excluding flareside bed	T53	US market only
T14	AWD models only	T34	Built before 11/02	T54	With onboard scale
T15	Excluding Grand Touring	T35	Excluding Police Package	T55	Excluding Hybrid SE
T16	WRX only	T36	Built after 11/02	T56	Excluding XLE
T17	Single rear wheels	T37	US vehicles only	T57	Hybrid SE
T18	SE models only	T38	Excluding Limited	T58	LX or S only
T19	Excluding SE models	T39	Limited only	N	Continued while supplies last
T20	Limited 2.0L and EX 2.0L models only	T40	Hybrid Blue only	--	

APPLICATION GUIDE ELECTRICAL SYSTEM NOTES

Electrical System Notes & Abbreviations			
1	2-wire system - No converter needed, 20-minute install **See page 167 and 169 for suggested splice-in plugs**	5	3-wire system - Use powered converter, 45-minute install
		6	3-wire system - Use HD powered converter, 45-minute install
2	2-wire system - Use powered converter, 45-minute install **See page 148 for suggested splice-in converter**	7	System requires PWM-ST converter, 45-minute install
		8	System requires PWM-STT converter, 45-minute install
3	2-wire system - Use multi-function converter, 45-minute install **See page 148 for suggested splice-in converter**	9	System requires low-side switching converter, 45-minute install
		10	System type to be determined at time of install
4	3-wire system - Use non-powered converter, 20-minute install	11	Vehicle plug may require dealer activation
PULSE WIDTH MODULATION (PWM) SYSTEM TYPES: **ST -** Stop, Tail and **STT -** Stop, Tail, Turn			

TOWING ACCESSORIES

FEATURED PRODUCTS

Tire Linc® Auto TPMS

Avoid the hazards of towing with underinflated or overinflated tires, saving you the hassle of manual checks before and during towing.

Universal coupler lock

The ratcheting mechanism and bright color protect the trailer from theft by occupying the coupler with a strong retching lock.

Adjustable tow hook step

This highly versatile adjustable channel mount offers 2" and 2-5/16" ball sizes, a tow hook and a built-in step for any situation.

PRODUCT INDEX

82 Trailer Balls

89 Ball Mounts

94 Towing Starter Kits

97 Forged Ball Mounts

98 Adjustable Ball Mounts

106 Tow Hook Mounts

108 Extenders & Adapters

110 Hitch Locks, Pins & Clips

115 Specialty Locks & Anti-Rattles

120 Pintle Hooks & Mounts

126 Trailer Hitch Accessories

131 Fab Components

TRAILER BALLS

ROCKERBALL™ TRAILER BALLS

- Dampens jerking and jarring from bumps and potholes for smoother towing
- Cushioned isolators reduce rattling and vibration for a more comfortable ride
- Reduces shock loads to the vehicle during sudden braking or acceleration
- Minimizes stress on tow vehicle's brakes and suspension for extended longevity
- Virtually maintenance-free with no airbag or bearings to service
- Anti-swivel base keeps RockerBall locked in place
- Forged steel construction with a durable carbide black powder coat finish on base and chrome plating on ball
- Tested for safety to meet SAE J684 specifications
- Not compatible with Rebellion™ XD ball mount

Scan to learn more

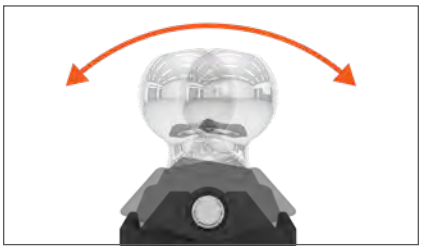

Dynamic trailer balls featuring ShockDrop™ technology reduce jerking and jarring

Retrofits onto most existing ball mounts to improve current towing experience

Grease zerk fitting allows for easy, periodic application of lubricant

40047 40246 40247 40248 40249

Shank Diameter (C)	Shank Length (B)	Rise (D)	Tongue Width (E)	GTW	Pkg Box #	Pkg Throne #
2" Ball Diameter (A)						
3/4"	2-1/8"	1-1/2"	2"	3,500 lbs.	--	40246
1"	2-1/8"	1-1/2"	2-1/2"	7,500 lbs.	40047	40247
2-5/16" Ball Diameter (A)						
1"	2-1/2"	1-5/8"	2-1/2"	7,500 lbs.	--	40248
1-1/4"	2-7/8"	1-5/8"	3"	12,000 lbs.	--	40249

Measuring RockerBall

A: Ball diameter
B: Shank length
C: Shank diameter
D: Rise
E: Tongue width

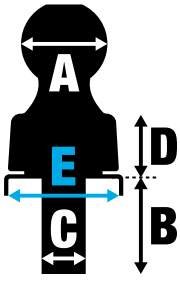

COMFORT. CONTROL. CONFIDENCE.

SHOCKDROP™ TECHNOLOGY

For Rebellion™ XD cushion hitches see page 98

ShockDrop technology is an adaptive, dynamic towing system that is engineered to reduce vibrations, rattling and strain on the vehicle. It does this by using an integrated, flexible polyurethane isolator for improved comfort and control. Compared to other cushion hitch options, ShockDrop is simple and virtually maintenance-free.

Enhanced comfort.

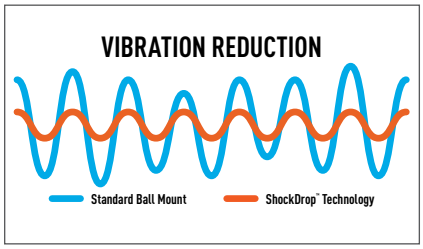

Unlike a traditional metal-on-metal towing connection, ShockDrop absorbs unevenness in the road to maximize comfort

Improved control.

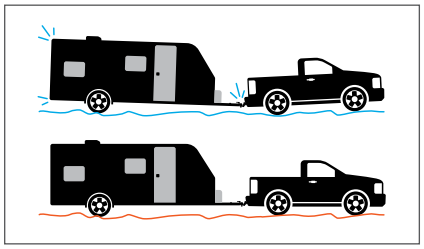

ShockDrop dynamically reacts to jarring, limiting its effects and giving the driver increased control on the road

Low maintenance.

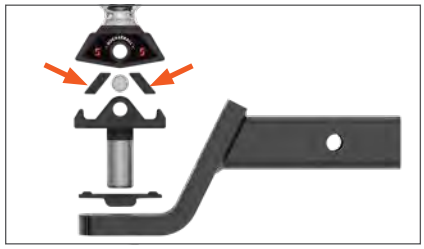

Unlike a cushion hitch with an airbag or bearings, ShockDrop is virtually maintenance-free and is tested for thousands of cycles

ROCKERBALL™ STARTER KITS

- Includes all the accessories needed to complement a trailer hitch in one kit

45144

45143

45149

Part #	Shank Size	GTW / TW	Ball Diameter	Drop	Length	Included Parts
45143	2"	7,500 / 750 lbs.	2"	3"	8-1/4"	45050 ball mount, 40047 RockerBall, 22323 anti-rattle pin
45144	2"	7,500 / 750 lbs.	2"	5"	9-1/4"	45070 ball mount, 40047 RockerBall, 22323 anti-rattle pin
45149	2"	7,500 / 750 lbs.	2-5/16"	1"	7-1/2"	45820 sway tab ball mount, 40248 RockerBall

STANDARD TRAILER BALLS

For master and inner pack quantities see page 341

- Fine threads provide superior holding strength
- Tested for safety to meet U.S. VESC V-5 specifications

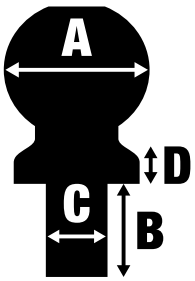

Measuring a trailer ball

A: Ball diameter
B: Shank length
C: Shank diameter
D: Rise

Chrome-plated

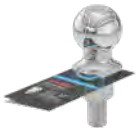

Bulk tag

Half throne

Stainless steel

Bulk tag

Full throne

Raw

Bulk tag

Shank Diameter (C)	Shank Length (B)	Rise (D)	GTW	Chrome Bulk #	Chrome Full Throne #	Chrome Half Throne #	Stainless Bulk #	Stainless Full Throne #	Raw Bulk #
1-7/8" Ball Diameter (A)									
3/4"	1-5/8"	0"	2,000 lbs.	40001	40061	40161	--	--	--
3/4"	2-1/8"	0"	2,000 lbs.	40015	40063	--	40050*	40080	--
3/4"	3"	0"	2,000 lbs.	40016	40071	--	--	--	--
1"	2-1/8"	0"	3,500 lbs.	40002	40062	40162	40051*	40081	--
1"	2-1/8"	2"	3,500 lbs.	40032	--	--	--	--	--
1"	3"	0"	3,500 lbs.	40017	40072	--	--	--	--
2" Ball Diameter (A)									
3/4"	1-3/4"	0"	3,500 lbs.	40003	40064	40164	--	--	--
3/4"	2-1/8"	0"	3,500 lbs.	40018	40065	--	40052	40082	--
3/4"	3"	0"	3,500 lbs.	40019	40073	--	--	--	--
1"	2-1/8"	0"	6,000 lbs.	40004	40066	40166	40053	40083	--
1"	2-1/8"	0"	7,500 lbs.	40037	40070	40170	--	--	--
1"	2-1/8"	1"	6,000 lbs.	40033	--	--	--	--	--
1"	2-1/8"	2"	6,000 lbs.	40034	--	--	--	--	--
1"	2-1/4"	0"	12,000 lbs.	40038†	--	--	--	--	--
1"	3"	0"	6,000 lbs.	40020	40074	--	--	--	--
1-1/4"	2-5/8"	0"	10,000 lbs.	40090	40069	40190	40056	--	--
2-5/16" Ball Diameter (A)									
1"	2-1/8"	0"	7,500 lbs.	40005	40067	40167	40054*	40084	--
1"	2-1/4"	0"	10,000 lbs.	40007	--	--	--	--	--
1"	2-1/4"	0"	12,000 lbs.	40039†	--	--	--	--	40042†
1"	3"	0"	6,000 lbs.	40021	40075	--	--	--	--
1-1/4"	2-5/8"	0"	10,000 lbs.	40006	40068	40168	--	--	--
1-1/4"	2-5/8"	0"	15,000 lbs.	40030†	40078†	40178†	40055	--	--
1-1/4"	2-5/8"	0"	30,000 lbs.	--	--	--	--	--	40085†
1-1/4"	2-5/8"	1"	10,000 lbs.	40035	--	--	--	--	--
1-1/4"	2-5/8"	1"	25,000 lbs.	--	--	--	--	--	40086†
1-1/4"	2-5/8"	2"	10,000 lbs.	40036	--	--	--	--	--
1-1/4"	2-5/8"	2"	25,000 lbs.	--	--	--	--	--	40087†
1-1/4"	2-3/4"	0"	20,000 lbs.	40008†	40009†	--	--	--	--
1-1/4"	3"	0"	6,000 lbs.	40022	40076	--	--	--	--
2"	3-1/2"	0"	30,000 lbs.	--	--	--	--	--	40088‡
3" Ball Diameter (A)									
2"	3-1/4"	0"	30,000 lbs.	--	--	--	--	--	40089‡
50mm Ball Diameter (A)									
3/4"	50mm	0"	1,600 kg.	40099	--	--	--	--	--

† Heat-treated ‡ Heat-treated, coarse-threaded * Continued while supplies last

LIPPERT

ATV-LAWN TRACTOR TRAILER BALLS

- Fits ATVs, UTVs or lawn tractors with 5/8" ball hole
- Constructed from high-strength, hot-forged steel
- Enhanced durability with chrome-plated finish
- Fine threading for superior holding strength
- Tested for safety to meet U.S. VESC V-5 specifications

40095 40096 40097 40098

Ball Diameter	Shank Diameter	Shank Length	Rise	GTW	Torque Specification	Bulk #	Pkg #
1-7/8"	5/8"	1-3/4"	0"	2,000 lbs.	90 lb-ft.	40095	40096
2"	5/8"	1-3/4"	0"	2,000 lbs.	90 lb-ft.	40097	40098

TRAILER BALL COVERS

- Protects trailer ball when not in use

Bulk #	Pkg #	Material	Fits
21800	21801	Black rubber	1-7/8" and 2" trailer balls
21810	21811	Black rubber	2-5/16" trailer balls

21800 21801 21810 21811

TRAILER BALL BOX-END WRENCH

- Six-point design ensures the best grip and protects against rounding of the nut
- Forged, hardened steel construction with a durable chrome plating

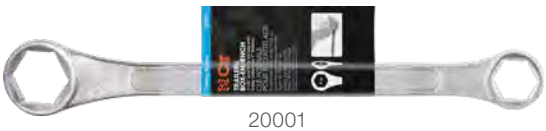

20001

Part #	Length	Wrench Sizes	Fits
20001	15-1/2"	1-1/8" and 1-1/2"	3/4" and 1" shanks

Six-point design protects from rounding the nut on the trailer ball

THOROUGHLY TESTED FOR SAFETY

REDUCER BUSHINGS

- Reduces hole size, allowing use of trailer balls with smaller shank diameters

21100 21101

21200 21201

21300

Bulk #	Pkg #	Reduces From	Reduces To	Finish
21100	21101	1"	3/4"	Yellow zinc-plated
21200	21201	1-1/4"	1"	Yellow zinc-plated
21300	--	1-3/8"	1-1/4"	Yellow zinc-plated

Reduces the hole of your ball mount to fit smaller trailer balls

BALL MOUNT TONGUE SLEEVE

- Allows for single-wrench trailer ball torquing
- For use with CURT and other 'wrench flat' trailer balls
- See our trailer ball box-end wrench below
- Patent #8,376,387

45007

Part #	Fits	Ball Hole Size	Finish
45007*	2-1/2" tongue width	1"	Gloss black

* Continued while supplies last

Tighten your trailer ball with a single wrench

SWITCH BALL™ TRAILER BALLS

- Exclusive 'J' groove design for secure attachment to the shank
- No tools, coins or pins required for trailer ball install or removal
- Shank bears the weight, freeing the coupler from binding
- Built from high-strength steel
- Protected by a premium grade, nickel chrome-plated finish
- Neck covers protect the Switch Ball neck from the elements when not in use
- Tested for safety in accordance with SAE J684
- U.S. patent #5,169,168; Canadian patent #1,325,445

Features

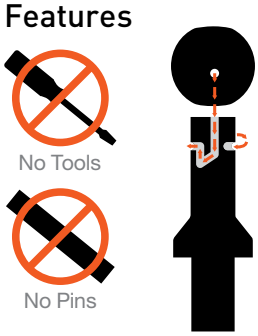

Measuring a Switch Ball™

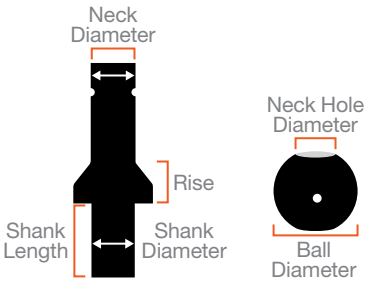

Place the ball on the shank

Twist the ball down onto the shank to lock

42178

42280

42225

41352

41353

Part #	Ball Diameter and GTW			Shank Length	Shank Diameter	Neck Diameter	Rise	Finish
	1-7/8"	2"	2-5/16"					
Switch Ball™ Trailer Ball Sets								
42178	3,500 lbs.	6,000 lbs.	--	2-1/4"	1"	1"	0"	Chrome-plated
42225	3,500 lbs.	6,000 lbs.	8,000 lbs.	2-1/4"	1"	1-1/8"	3/4"	Chrome-plated
42280	--	6,000 lbs.	8,000 lbs.	2-1/4"	1"	1-1/8"	3/4"	Chrome-plated
41782	3,500 lbs.	6,000 lbs.	--	1-5/8"	3/4"	1"	0"	Chrome-plated
Switch Ball™ Neck Covers								
41352*	--	--	--	--	--	1"	--	Black rubber
41353*	--	--	--	--	--	1"	--	Red rubber

* Continued while supplies last

Rebellion™ XD 2-1/2" shank with dual-ball

ENGINEERED WITH A SLEEK, MODERN LOOK

BALL MOUNTS

1¼ INCH EURO MOUNT® BALL MOUNTS

- Fits any 1-1/4" receiver tube opening
- Installs easily with no tools or torque specifications required
- Permanently attached trailer ball cannot be loosened or stolen
- Durable carbide black powder coat finish
- Patents: #D610,051 S; #D610,492 S; #D610,493 S; #D610,494 S; #D610,954 S

45551 (1-7/8" ball)
45552 (2" ball)

45571 (1-7/8" ball)
45572 (2" ball)

45561 (1-7/8" ball)
45562 (2" ball)

45591 (1-7/8" ball)
45592 (2" ball)

45581 (1-7/8" ball)
45582 (2" ball)

Part #	GTW / TW	Ball Diam.	Ball Height	Length
45551	3,500 / 350 lbs.	1-7/8"	2-3/4"	10"
45571	3,500 / 350 lbs.	1-7/8"	4-5/8"	7-1/4"
45561	3,500 / 350 lbs.	1-7/8"	5-1/8"	9-3/4"
45591	3,500 / 350 lbs.	1-7/8"	5-1/8"	11-1/4"
45581*	3,500 / 350 lbs.	1-7/8"	Negative 3/4"	8-3/4"
45552	3,500 / 350 lbs.	2"	2-3/4"	10"
45572	3,500 / 350 lbs.	2"	4-5/8"	7-1/4"
45562	3,500 / 350 lbs.	2"	5-1/8"	9-3/4"
45592	3,500 / 350 lbs.	2"	5-1/8"	11-1/4"
45582*	3,500 / 350 lbs.	2"	Negative 3/4"	8-3/4"

* Continued while supplies last

Required Ball Height = A - B

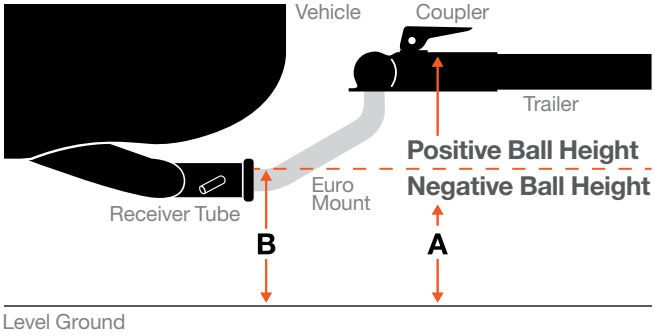

MEASURING A BALL MOUNT

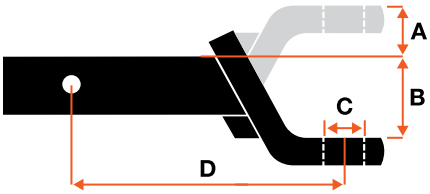

A: Rise

Distance the ball platform is set above the top of the shank.

B: Drop

Distance the ball platform is set below the top of the shank.

C: Hole Size

Size of trailer ball shank that is required to fit the ball mount.

D: Length

Distance from the pin hole center to the ball hole center.

1¼ INCH CLASS 1 & 2 BALL MOUNTS

- Fits any 1-1/4" x 1-1/4" receiver tube opening
- Multiple drop and rise options to accommodate various vehicle-trailer combinations
- Compatible with anti-rattle accessory to help stop vibration (see page 119)

Multiple drop and rise options accommodate various vehicle-trailer combinations

45021
45520

45024
45014

45023
45522

45025
45015

45000

Part #	GTW / TW	Drop	Rise	Length	Tongue Hole Size	Shank Type	Finish
Class 1 Ball Mounts							
45018	2,000 / 200 lbs.	1-1/4"	5/8"	6-3/4"	3/4"	Hollow	Gloss black
45019	2,000 / 200 lbs.	1-1/4"	5/8"	9-3/4"	3/4"	Hollow	Gloss black
45027	2,000 / 200 lbs.	3-1/4"	2-5/8"	6-1/4"	3/4"	Hollow	Gloss black
45022	2,000 / 200 lbs.	3-1/4"	2-5/8"	7-1/4"	3/4"	Hollow	Gloss black
45026	2,000 / 200 lbs.	3-1/4"	2-5/8"	9-3/8"	3/4"	Hollow	Gloss black
45028	2,000 / 200 lbs.	6"	4-5/8"	5-9/16"	3/4"	Solid	Gloss black
45021	2,000 / 200 lbs.	--	3-3/4"	9-1/2"	3/4"	Solid	Gloss black
45023	2,000 / 200 lbs.	--	3-3/4"	11-1/2"	3/4"	Solid	Gloss black
45024	2,000 / 200 lbs.	--	5"	9-9/16"	3/4"	Solid	Gloss black
45025	2,000 / 200 lbs.	--	5"	11-9/16"	3/4"	Solid	Gloss black
Class 2 Ball Mounts							
45503	3,500 / 350 lbs.	1"	3/8"	7-13/16"	3/4"	Solid	Gloss black
45518	3,500 / 350 lbs.	1-1/4"	3/4"	6-3/4"	3/4"	Solid	Gloss black
45519	3,500 / 350 lbs.	1-1/4"	3/4"	9-3/4"	3/4"	Solid	Gloss black
45017	3,500 / 350 lbs.	3-1/4"	2-5/8"	6-1/4"	3/4"	Solid	Gloss black
45521	3,500 / 350 lbs.	3-1/4"	2-5/8"	7-1/4"	3/4"	Solid	Gloss black
45016	3,500 / 350 lbs.	3-1/4"	2-5/8"	9-3/8"	3/4"	Solid	Gloss black
45520	3,500 / 350 lbs.	--	3-1/8"	9-3/4"	3/4"	Solid	Gloss black
45510	3,500 / 350 lbs.	--	3-1/8"	10-5/16"	3/4"	Solid	Gloss black
45522	3,500 / 350 lbs.	--	3-1/8"	11-1/4"	3/4"	Solid	Gloss black
45000	3,500 / 350 lbs.	--	3-7/8"	13-1/2"	3/4"	Solid	Gloss black
45014	3,500 / 350 lbs.	--	5"	9-5/8"	3/4"	Solid	Gloss black
45015	3,500 / 350 lbs.	--	5"	11-5/8"	3/4"	Solid	Gloss black

45510

45503

45018
45518

45019
45519

45027
45017

45022
45521

45028

45026
45016

2 INCH CLASS 3 BALL MOUNTS

- Fits any 2" x 2" receiver tube opening
- Multiple drop and rise options to accommodate various vehicle-trailer combinations
- Increased drop on select models allows for level towing with lifted vehicles
- Compatible with anti-rattle accessory to help stop vibration (see page 119)
- White box kits include a pin & clip

45080

45100

45112

45010

45020

45250

45030

45290

45040

45260

45050

45296

45060

45270

45012

45032

45052

USA Made #	Imported Bulk #	Chrome Bulk #	White Box Kit #	GTW / TW	Drop	Rise	Length	Tongue Hole Size	Shank Type
45030	45830	45290	45032	7,500 / 750 lbs.	2"	3/4"	7-1/2"	1"	Hollow
45010	45828	--	45012	7,500 / 750 lbs.	2"	3/4"	8-1/4"	1"	Hollow
45040	45840	--	--	7,500 / 750 lbs.	2"	3/4"	10-1/4"	1"	Hollow
45020	45829	--	--	7,500 / 750 lbs.	2"	3/4"	10-1/4"	1"	Hollow
45260	--	--	--	7,500 / 750 lbs.	2"	3/4"	12-1/4"	1"	Hollow
45250	--	--	--	7,500 / 750 lbs.	2"	3/4"	12-1/4"	1"	Hollow
45050	45850	45296	45052	7,500 / 750 lbs.	4"	2"	8-1/4"	1"	Hollow
45060	45860	--	--	7,500 / 750 lbs.	4"	2"	10-1/4"	1"	Hollow
45270	--	--	--	7,500 / 750 lbs.	4"	2"	13"	1"	Hollow
45070	45870	45297	--	7,500 / 750 lbs. drop 6,000 / 600 lbs. rise	6"	4"	9-1/4"	1"	Hollow
45080	45880	--	--	7,500 / 750 lbs. drop 6,000 / 600 lbs. rise	6"	4"	12-1/4"	1"	Hollow
45280	--	--	--	7,500 / 750 lbs. drop 6,000 / 600 lbs. rise	6"	4"	14-1/4"	1"	Hollow
45090	45890	--	--	5,000 / 500 lbs. drop 3,500 / 350 lbs. rise	8"	6"	11-1/2"	1"	Hollow
45100	45891	--	--	5,000 / 500 lbs. drop 3,500 / 350 lbs. rise	8"	6"	13"	1"	Hollow
45110	45892	--	--	5,000 / 500 lbs. drop 3,500 / 350 lbs. rise	10"	8"	13"	1"	Hollow
45112	45893	--	--	5,000 / 500 lbs. drop 3,500 / 350 lbs. rise	10"	8"	14"	1"	Hollow

LIGHTWEIGHT AND CORROSION-RESISTANT

2 INCH ALUMINUM BALL MOUNTS

- Fits trailer hitches with a 2" x 2" receiver tube opening
- Constructed from solid aluminum to be lightweight and naturally rust-resistant
- Tested for safety in accordance with SAE J684
- Compatible with anti-rattle accessory to help stop vibration (see page 119)

45360

45361

45362

Constructed from solid aluminum to be lightweight and naturally rust-resistant

Part #	GTW / TW	Drop	Rise	Length	Tongue Hole Size	Shank Type	Finish
45360	8,000 / 800 lbs.	2"	1"	8-1/2"	1"	Solid	Matte
45361	8,000 / 800 lbs.	4"	3"	8-1/2"	1"	Solid	Matte
45362	8,000 / 800 lbs.	6"	5"	8-1/2"	1"	Solid	Matte

1¼ INCH & 2 INCH & 2½ INCH & 3 INCH LOADED BALL MOUNTS

- Fits any 2" x 2" receiver tube opening
- Includes a factory-torqued trailer ball (pin & clip included on select models)
- Three-packs include a point-of-purchase tray
- Compatible with anti-rattle accessory to help stop vibration (see page 119)

45148

45147

45037
multi-pack

45064 (2" ball)
45065 (2-5/16" ball)

45034 (1-7/8" ball)
45036 (2" ball)
45041 (2-5/16" ball)

45293 (1-7/8" ball)
45295 (2" ball)

45055 (1-7/8" ball)
45056 (2" ball)
45042 (2-5/16" ball)

45331

45332

USA Made #	Imported Part #	Box #	Three-Pack #	GTW / TW	Ball Diameter	Drop	Length	Shank Type	Finish
1-1/4" x 1-1/4" Loaded Ball Mounts									
45148†‡	--	--	--	3,500 / 350 lbs.	2"	3-1/4"	7-1/4"	Solid	Gloss black
45147†‡	--	--	--	3,500 / 350 lbs.	2"	1-1/4"	9-3/4"	Solid	Gloss black
2" x 2" Loaded Ball Mounts									
45034†‡	45834†	--	--	3,500 / 350 lbs.	1-7/8" (40002)	2"	8-1/4"	Hollow	Gloss black
--	--	45293†	--	3,500 / 350 lbs.	1-7/8" (40002)	2"	8-1/4"	Hollow	Chrome-plated
45036†‡	45836†	--	45037†	7,500 / 750 lbs.	2" (40037)	2"	8-1/4"	Hollow	Gloss black
--	--	45295†	--	7,500 / 750 lbs.	2" (40037)	2"	8-1/4"	Hollow	Chrome-plated
45041†‡	--	--	--	7,500 / 750 lbs.	2-5/16" (40005)	2	8-1/4"	Hollow	Gloss black
45055†‡	45855†	--	--	3,500 / 350 lbs.	1-7/8" (40002)	4"	8-1/4"	Hollow	Gloss black
45056†‡	45856†	--	45057†	7,500 / 750 lbs.	2" (40037)	4"	8-1/4"	Hollow	Gloss black
45042†‡	--	--	--	7,500 / 750 lbs.	2-5/16" (40005)	4"	8-1/4"	Hollow	Gloss black
45064†‡	--	--	--	7,500 / 750 lbs.	2" (40037)	6"	9-1/4"	Hollow	Gloss black
45065†‡	--	--	--	7,500 / 750 lbs.	2-5/16" (40005)	6"	9-1/4"	Hollow	Gloss black
2" x 2" Loaded Ball Mounts - Forged									
	45331	--	--	15,000 / 1,500 lbs.	2-5/16" (40030)	2"	8-1/2"	Solid	Carbide black
	45332	--	--	15,000 / 1,500 lbs.	2-5/16" (40030)	4"	8-1/2"	Solid	Carbide black
	45370	--	--	15,000 / 1,500 lbs.	2-5/16" (40030)	6"	9-1/2"	Solid	Carbide black
2-1/2" x 2-1/2" Loaded Ball Mounts - Forged									
--	45371	--	--	20,000 / 2,000 lbs.	2-5/16" (40008)	2"	8-1/2"	Solid	Carbide black
--	45372	--	--	20,000 / 2,000 lbs.	2-5/16" (40008)	4"	8-1/2"	Solid	Carbide black
--	45373	--	--	20,000 / 2,000 lbs.	2-5/16" (40008)	6"	9"	Solid	Carbide black
--	45374	--	--	20,000 / 2,000 lbs.	2-5/16" (40008)	8"	10"	Solid	Carbide black
3" x 3" Loaded Ball Mounts - Forged									
--	45375	--	--	20,000 / 2,000 lbs.	2-5/16" (40008)	4"	9"	Solid	Carbide black
--	45376	--	--	20,000 / 2,000 lbs.	2-5/16" (40008)	6"	10"	Solid	Carbide black
--	45377	--	--	20,000 / 2,000 lbs.	2-5/16" (40008)	8"	10-1/2"	Solid	Carbide black

† Includes pin & clip ‡ Ball mount made in USA with imported trailer ball, pin & clip

COMFORT. CONTROL. CONFIDENCE.

2 INCH TOWING STARTER KITS

Scan to learn more

RockerBall™ starter kits

- Dynamic trailer ball and ball mount kit featuring ShockDrop™ technology
- Dampens jerking and jarring from bumps and potholes for smoother towing
- Includes anti-rattle kit to help stop rattling and vibration
- For more details on the advantages of RockerBall, see page 82

Standard starter kits

- Includes all the accessories needed to complement a trailer hitch in one kit
- Reusable case is able to be shelved or hung on pegs (#45534, #45554)
- Compatible with anti-rattle accessory to help stop vibration (see page 119)

45144

45143

45534

45554

Part #	Shank Size	GTW / TW	Ball Diameter	Drop	Length	Included Parts
RockerBall Starter Kits						
45143	2"	7,500 / 750 lbs.	2"	3"	8-1/4"	45050 ball mount, 40047 RockerBall, 22321 anti-rattle
45144	2"	7,500 / 750 lbs.	2"	5"	9-1/4"	45070 ball mount, 40047 RockerBall, 22321 anti-rattle
Standard Starter Kits						
45534*	2"	7,500 / 750 lbs.	2"	2"	8-1/4"	45030 ball mount, 40037 trailer ball, 23515 hitch lock, 22272 hitch tube cover, 21500 pin & clip, case
45554*	2"	7,500 / 750 lbs.	2"	4"	8-1/4"	45050 ball mount, 40037 trailer ball, 23515 hitch lock, 22272 hitch tube cover, 21500 pin & clip, case

* Includes sturdy, reusable case

2 INCH RV TOWING STARTER KIT

- Complete kit to maximize comfort and control when towing a small travel trailer
- Ideal for vehicles less than 5,000 lbs. GVW and trailers 3,500 to 5,000 lbs. GTW
- Pre-torqued RockerBall™ dampens jerking and jarring for smoother towing, see page 82 for more information
- Echo® brake controller uses Bluetooth and smartphone to control trailer brakes, see page 138 for more information
- Sway control unit helps limit lateral trailer movement to reduce sway

45190

Part #	Shank Size	GTW / TW	Ball Diameter	Drop	Length	Included Parts
45190	2"	7,500 / 750 lbs.	2-5/16"	1"	7-1/2"	45149 RockerBall pre-torqued on sway tab mount, 51180 Echo brake controller, 17200 sway control, 22323 anti-rattle

2 INCH ROCKERBALL™ CUSHION HITCH WITH SWAY TAB

- Dynamic trailer ball and ball mount kit featuring ShockDrop™ technology
- Pre-torqued RockerBall™ dampens jerking and jarring for smoother towing, see page 82 for more information
- Reduces shock loads to the vehicle during sudden braking or acceleration
- Sway tab provides an attachment point for a trailer sway control unit
- See page 189 for sway control accessories

45149

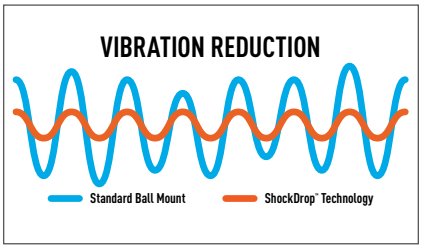

Unlike a traditional metal-on-metal towing connection, ShockDrop absorbs unevenness in the road to maximize comfort

Part #	Shank Size	GTW / TW	Ball Diameter	Drop	Length
45149	2"	7,500 / 750 lbs.	2-5/16"	1"	7-1/2"

2 INCH SWAY TAB BALL MOUNT

- Fits any 2" x 2" receiver tube opening
- Provides a mounting tab for a sway control trailer ball (ball sold separately)
- Compatible with anti-rattle accessory
- See page 189 for sway control accessories

45820

Coupled sway control (17200)

Part #	GTW / TW	Drop	Rise	Length	Tongue Hole Size
45820	7,500 / 750 lbs.	2"	3/4"	7-1/2"	1"

2 INCH FUSION™ BALL MOUNTS

- Fits any 2" x 2" receiver tube opening
- Welded trailer ball cannot be loosened or stolen
- Compatible with anti-rattle accessory (see page 119)

45141 (2" ball) - includes hitch lock

45131 (1-7/8" ball)
45134 (2" ball)

45142 (2" ball) - includes hitch lock

45151 (1-7/8" ball)
45154 (2" ball)

45152 (1-7/8" ball)
45155 (2" ball)

Part #	GTW / TW	Ball Diameter	Drop	Rise	Length	Finish	Includes
45131	5,000 / 500 lbs.	1-7/8"	2"	--	7-1/2"	Gloss black	Pin & clip
45134	7,500 / 750 lbs.	2"	2"	--	7-1/2"	Gloss black	Pin & clip
45141	7,500 / 750 lbs.	2"	2"	--	7-1/2"	Gloss black	Hitch lock
45151	5,000 / 500 lbs.	1-7/8"	4"	--	8-1/8"	Gloss black	Pin & clip
45154	7,500 / 750 lbs.	2"	4"	--	8-1/8"	Gloss black	Pin & clip
45142	7,500 / 750 lbs.	2"	4"	--	8-1/8"	Gloss black	Hitch lock
45152	5,000 / 500 lbs.	1-7/8"	--	2"	8-1/8"	Gloss black	Pin & clip
45155	7,500 / 750 lbs.	2"	--	2"	8-1/8"	Gloss black	Pin & clip

2 INCH CLASS 4 BALL MOUNTS

- Fits any 2" x 2" receiver tube opening
- Increased drop allows for level towing with lifted vehicles
- Compatible with anti-rattle accessory (see page 119)

45310

45312

45311

45313

45336

45446

45338

45448

Part #	GTW / TW	Drop	Rise	Length	Tongue Hole Size	Shank Type	Finish
45310	10,000 / 1,000 lbs.	2"	1"	9-3/8"	1-1/4"	Hollow	Gloss black
45311	10,000 / 1,000 lbs.	4"	2-3/4"	9-3/8"	1-1/4"	Hollow	Gloss black
45336	10,000 / 1,000 lbs.	6"	4-3/4"	9-3/8"	1-1/4"	Hollow	Gloss black
45338	10,000 / 1,000 lbs.	8"	6-3/4"	9-3/8"	1-1/4"	Hollow	Gloss black
45312	12,000 / 1,200 lbs.	2"	1"	9-3/8"	1-1/4"	Solid	Gloss black
45313	12,000 / 1,200 lbs.	4"	3"	9-3/8"	1-1/4"	Solid	Gloss black
45446	12,000 / 1,200 lbs.	6"	5"	9-3/8"	1-1/4"	Solid	Gloss black
45448	12,000 / 1,200 lbs.	8"	7"	9-3/8"	1-1/4"	Solid	Gloss black

2 INCH DUAL-LENGTH BALL MOUNTS

- Fits any 2" x 2" receiver tube opening
- Two hitch pin holes for varying length
- Compatible with anti-rattle accessory to help stop vibration (see page 119)

45220

45230

45240

Part #	GTW / TW	Drop	Rise	Length	Hole	Finish
45220	7,500 / 750 lbs.	2"	3/4"	7-1/2" or 10-1/2"	1"	Gloss black
45230	7,500 / 750 lbs.	4"	2"	8-1/8" or 11-1/8"	1"	Gloss black
45240	7,500 / 750 lbs. drop 6,000 / 600 lbs. rise	6"	4"	9-1/4" or 12-1/4"	1"	Gloss black

Two pin holes for varying length

2 INCH & 2½ INCH & 3 INCH FORGED BALL MOUNTS

- Solid, forged steel for superior strength
- Compatible with anti-rattle accessory (see page 119)
- Also available with pre-torqued trailer ball (see page 93)

45340

45341

45342

45456

45458

45459

45460

45430

45431

45432

Part #	Shank Size	GTW / TW	Drop	Rise	Length	Tongue Hole Size	Finish
2" x 2" Xtra Duty Forged Ball Mounts							
45340	2" x 2"	17,000 / 2,550 lbs.	2"	1"	8-1/2"	1-1/4"	Carbide black
45341	2" x 2"	17,000 / 2,550 lbs.	4"	3"	8-1/2"	1-1/4"	Carbide black
45342	2" x 2"	17,000 / 2,550 lbs.	6"	5"	9-1/2"	1-1/4"	Carbide black
2-1/2" x 2-1/2" Commercial Duty Forged Ball Mounts							
45456	2-1/2" x 2-1/2"	20,000 / 2,700 lbs.	2"	1/2"	8-1/2"	1-1/4"	Carbide black
45458	2-1/2" x 2-1/2"	20,000 / 2,700 lbs.	4"	2-1/2"	8-1/2"	1-1/4"	Carbide black
45459	2-1/2" x 2-1/2"	20,000 / 2,700 lbs.	6"	4-1/2"	9"	1-1/4"	Carbide black
45460	2-1/2" x 2-1/2"	20,000 / 2,700 lbs. drop 16,000 / 2,160 lbs. rise	8"	6-1/2"	10"	1-1/4"	Carbide black
3" x 3" Industrial Duty Forged Ball Mounts							
45430	3" x 3"	21,000 / 2,800 lbs.	4"	2"	9"	1-1/4"	Carbide black
45431	3" x 3"	21,000 / 2,800 lbs.	6"	4"	10"	1-1/4"	Carbide black
45432	3" x 3"	21,000 / 2,800 lbs.	8"	6"	10-1/2"	1-1/4"	Carbide black

For RockerBall™ products see page 82

Scan to learn more

COMFORT. CONTROL. CONFIDENCE.

2 INCH & 2½ INCH REBELLION™ XD ADJUSTABLE CUSHION HITCH DUAL-BALL MOUNTS

- Reduces shock loads to the vehicle during sudden braking or acceleration
- Minimizes stress on tow vehicle's brakes and suspension for extended longevity
- Lighter-weight design for less stress on the trailer hitch receiver
- Cast steel construction with stainless steel fasteners, pins and clips
- Textured, dark grey teridium finish for a premium look on your vehicle
- Tested for safety to meet SAE J684
- Informative, full-color retail box
- Patent #11,685,206

Enhanced comfort.

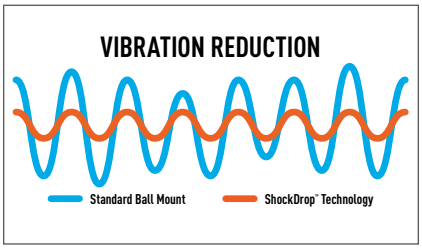

Unlike a traditional metal-on-metal towing connection, ShockDrop absorbs unevenness in the road to maximize comfort

Improved control.

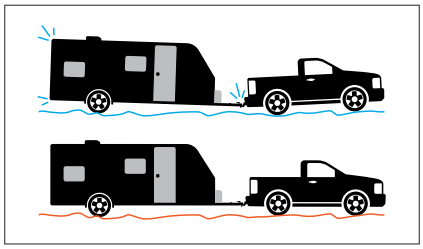

ShockDrop dynamically reacts to jarring, limiting its effects and giving the driver increased control on the road

Low maintenance.

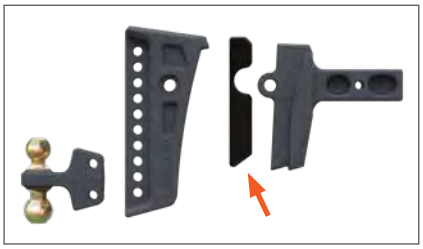

Unlike a cushion hitch with an airbag or bearings, ShockDrop is virtually maintenance-free and is tested for 300K+ cycles

Part #	Shank Size	2" Ball GTW / TW	2-5/16" Ball GTW / TW	Max Drop	Length
45951	2"	10,000 / 1,000 lbs	15,000 / 1,500 lbs.	6"	12-1/4"
45955	2-1/2"	10,000 / 1,000 lbs	20,000 / 2,000 lbs	8"	14-1/4"

REBELLION™ XD PINTLE ACCESSORY

- Mounts onto CURT Rebellion™ XD adjustable shank
- Constructed from cast steel for optimum strength
- Weight capacity limited to Rebellion™ XD ball mount
- Includes four bolts to mount pintle hitch
- Attachment pins not included
- Dark grey teridium powder coat finish

Accepts any CURT mount-style pintle hook or ball and pintle combination hitch

Integrated rubber dampener for enhanced vibration resistance

45950

Part #	Description	Dimensions	Capacity	Finish
45950	Pintle mount attachment	3-5/16" (W) x 1-3/4" (H) hole spacing	Limited to Rebellion XD ball mount	Dark grey teridium

REBELLION™ XD ACCESSORY LOCKS

- Locks replace standard clips and hitch pin for increased security
- Unique, integrated design fits all CURT Rebellion™ XD accessories
- Easy-to-operate, 1/4-turn lock activation
- Locks keyed alike for convenient one-key operation (#45932 only)

Locks replace standard clips and hitch pin for increased security

45932 45938

Part #	Description	Fits	Finish
45932	Tongue & hitch lock set	Hitch lock fits 2" and 2-1/2" receiver tubes	Black powder-coated aluminum and stainless steel
45938	Tongue lock only	Fits Rebellion XD shank pins only	Black powder-coated aluminum

2 INCH & 2½ INCH ADJUSTABLE DUAL-BALL MOUNTS

- Highly versatile design adapts to multiple vehicle-trailer combinations
- Adjustable dual ball allows for quick and precise trailer leveling
- Deep-drop shank ideal for large or lifted trucks and SUVs (#45936, #45939)
- Dual ball can be used on other weight distributing shanks (holes spaced 2-1/2" on-center)
- Shank can be flipped to provide necessary drop or rise (select models)
- Built-in anti-rattle helps promote quiet towing
- Unique clip design installs easily over both pins and is vibration-resistant
- Dual-ball mount is compatible with Rebellion™ XD locks (see page 99)
- High-strength forged steel construction for dependable towing
- Durable carbide powder coat finish (trailer ball finish varies, see table)
- Informative, full-color retail box

45935

45936

45937

45939

Dual ball attachment eliminates the need to carry extra attachments by providing two ball sizes in one

Anti-rattle technology promotes a quieter and smoother ride by preventing loud noises from the receiver coupling while towing

Deep-drop shank ideal for large or lifted trucks and SUVs

Part #	Shank Size	2" Ball GTW / TW	2-5/16" Ball GTW / TW	Max Drop	Max Rise	Length	Ball Finish
45935	2"	10,000 / 1,000 lbs.	15,000 / 1,500 lbs.	5-1/2"	4-1/2"	12-1/4"	Chrome-plated
45936	2"	10,000 / 1,000 lbs.	15,000 / 1,500 lbs.	10"	9"	12-1/4"	Chrome-plated
45937	2-1/2"	10,000 / 1,000 lbs.	20,000 / 2,000 lbs	5-1/2"	4-1/2"	14-1/4"	Yellow zinc-plated
45939	2-1/2"	10,000 / 1,000 lbs.	20,000 / 2,000 lbs	11-3/4"	N/A*	14-1/4"	Yellow zinc-plated

* Not to be used in the rise position

EASILY CHANGE THE HEIGHT OF YOUR HITCH

2 INCH & 2½ INCH DUAL-BALL ATTACHMENTS FOR WEIGHT DISTRIBUTION SHANKS

- Instantly transforms your weight distribution shank into an adjustable ball mount
- Fits standard weight distribution shanks with holes spaced 2-1/2" on-center
- Adjustable design allows for quick and precise trailer leveling
- Compatible with all CURT weight distribution shanks (sold separately, see page 187)
- Built-in anti-rattle helps promote quiet towing
- Unique clip design installs easily over both pins and is vibration-resistant (see page 99 for lock options)
- High-strength forged steel construction with durable carbide powder coat finish

45934

45933

Part #	Fits Shank Size	2" Ball GTW / TW	2-5/16" Ball GTW / TW	Includes	Ball Finish
45933	2"	10,000 / 1,000 lbs.	15,000 / 1,500 lbs.	Dual ball, two pins and clip	Chrome-plated
45934	2-1/2"	10,000 / 1,000 lbs.	20,000 / 2,000 lbs	Dual ball, two pins and clip	Yellow zinc-plated

ADAPT YOUR HITCH TO ANY SITUATION

2 INCH & 2½ INCH & 3 INCH ADJUSTABLE CHANNEL MOUNTS

Check out our WD adjustable mounts! See page 100

Product Details

- Adjustable channel allows for precise trailer leveling
- Shank can be flipped for max rise or drop
- Two hitch pin holes provide varying shank length
- Built-in anti-rattle helps promote quiet towing
- Channels measure 3" wide (I.D.) with holes spaced 1" on center (excl #45903 slim)
- Durable carbide black powder coat finish
- Includes hitch pin & clip and accessory pins & clips
- Patent #8,033,563 (excl #45901 ball mount)
- Informative, full-color retail packaging

45903 packaging

Dual-ball

- Available in 2", 2-1/2" and 3" shank sizes
- Deep drop configurations for larger, lifted trucks

Slim-style

- Weighs only 15 lbs. for easy handling
- One-pin ball attachment for quick, easy adjustment

Hook & step dual-ball

NEW

- Tow hook perfect for vehicle recovery and straight-line pull applications
- Non-skid step for easy truck bed access

Pintle-style

- Available in 2" and 2-1/2" shank sizes
- Fits 2-5/16" couplers or lunette eyes with a 2-1/2" or 3" inside diameter

Ball mount

- 1" hole will accept a trailer ball shank

LIPPERT

2 INCH & 2½ INCH & 3 INCH ADJUSTABLE CHANNEL MOUNTS

Check out our WD adjustable mounts! See page 100

45903

45901

45900

45902

NEW
45904

45907

45908

45926

45927

45928

Part #	Shank Size	2" Ball GTW	2-5/16" Ball GTW	Tow Hook Capacity	Ball Mount GTW	Max Drop	Max Rise	Length	Ball Finish
45903	2"	8,000 lbs.	10,000 lbs.	--	--	3-3/4"	3-1/2"	10" / 11"	Yellow zinc-plated
45901	2"	--	--	--	6,000 lbs.	6-3/4"	5-1/4"	11" / 12"	--
45900	2"	10,000 lbs.	14,000 lbs.	--	--	6"	5-1/4"	11" / 12"	Yellow zinc-plated
45902	2-1/2"	10,000 lbs.	20,000 lbs.	--	--	6"	5-1/4"	11" / 12"	Yellow zinc-plated
45904 N	2"	10,000 lbs.	14,000 lbs.	10,000 lbs.	--	6"	5-1/4"	11" / 12"	Yellow zinc-plated
45907	2"	--	13,000 lbs.	--	--	6"	5-1/4"	11" / 12"	Chrome-plated
45908	2-1/2"	--	20,000 lbs.	--	--	6"	5-1/4"	11" / 12"	Chrome-plated
45926	2"	10,000 lbs.	14,000 lbs.	--	--	10-1/8"	9-1/8"	11" / 12"	Yellow zinc-plated
45927	2-1/2"	10,000 lbs.	20,000 lbs.	--	--	10-3/8"	8-7/8"	11" / 12"	Yellow zinc-plated
45928	3"	10,000 lbs.	21,000 lbs.	--	--	10-5/8"	8-5/8"	11" / 12"	Yellow zinc-plated

ADJUSTABLE CHANNEL MOUNT ACCESSORIES

Hitch step

- Cast steel construction
- Folds up when not in use

45909

Lock set

- Channel lock replaces one channel-mount pin
- Locks keyed alike for convenient one-key operation

23556

Part #	Description	Tongue Weight	Step Width	Includes	Fits
45909	Hitch step	500 lbs.	16"	Hitch step only (no pins)	All channel mounts (excl. 45903)
23556	Lock set	--	--	5/8" hitch lock and channel lock	All channel mounts (excl. 45903) 2" or 2-1/2" receiver tubes

2 INCH ADJUSTABLE TRI-BALL MOUNT

- Fits any 2" x 2" receiver tube opening
- Adjustable height allows for precise trailer leveling
- Includes three 5/8" diameter pins & clips
- Compatible with anti-rattle accessory to help stop vibration (see page 119)

45799

Part #	GTW	Ball Diameter	Max Drop	Max Rise	Length
45799	6,000 / 7,500 / 10,000 lbs.	1-7/8", 2", 2-5/16"	5-3/4"	5-3/4"	16"

2 INCH ADJUSTABLE MULTI-PURPOSE BALL MOUNT

- Fits any 2" x 2" receiver tube opening
- Adjustable height allows for precise trailer leveling
- Includes three 5/8" diameter pins & clips
- Patent #8,534,695

Welded trailer balls and clevis bar for lunette rings

45049

Part #	Ball Diam. and Max GTW / TW		Clevis Bar Capacity	Max Drop	Max Rise	Length
	2"	2-5/16"				
45049	7,500 / 750 lbs.	10,000 / 1,000 lbs.	10,000 lbs.	4-1/2"	6-1/2"	14-3/16"

2 INCH ADJUSTABLE BALL MOUNT

- Fits any 2" x 2" receiver tube opening
- Adjusts in 1-1/2" increments for precise trailer leveling
- Compatible with anti-rattle accessory (see page 119)
- Includes pin & clip (#21500)

45812 drop

45812 range

Part #	GTW / TW	Max Drop	Max Rise	Length	Tongue Hole Size	Finish
45812	5,000 / 500 lbs.	7-1/2"	6-1/4"	12-1/2"	1"	Gloss black

2 INCH & 2½ INCH MULTI-BALL MOUNTS

- Fits 2" or 2-1/2" receiver tube openings
- Allows for quick switching between trailer ball sizes
- Permanently attached hook or trailer balls cannot be loosened or stolen
- Compatible with anti-rattle accessory to help stop vibration (see page 119)

45675

45650
45652

45655
45001

45660

45665
45002

45651

Hollow Shank #	Solid Shank #	Trailer Balls	Ball Diameter and Maximum GTW / TW			Length	Ball Finish	Shank Finish
			1-7/8"	2"	2-5/16"			
For 2" x 2" Receiver Tube Openings								
--	45660	2	--	7,500 / 750 lbs.	10,000 / 1,000 lbs.	8-1/2"	Black	Gloss black
45002	45665	2	--	7,500 / 750 lbs.	10,000 / 1,000 lbs.	8-1/2"	Chrome	Gloss black
--	45675*	3	3,500 / 350 lbs.	5,000 / 500 lbs.	10,000 / 1,000 lbs.	7" and 8-1/2"	Chrome	Gloss black
45652	45650	3	5,000 / 500 lbs.	7,500 / 750 lbs.	10,000 / 1,000 lbs.	7" and 8-1/2"	Black	Gloss black
45001	45655	3	5,000 / 500 lbs.	7,500 / 750 lbs.	10,000 / 1,000 lbs.	7" and 8-1/2"	Chrome	Gloss black
For 2-1/2" x 2-1/2" Receiver Tube Openings								
45651	--	3	5,000 / 500 lbs.	10,000 / 1,000 lbs.	14,000 / 1,400 lbs.	7-1/4" and 8-1/4"	Black	Gloss black

* Tow hook limited to trailer hitch capacity

CLEVIS PINS

- Heavy-duty hitch pin for hitch accessories or towing with a UTV or lawn tractor
- Extra-wide, rubber-coated handle for better grip
- Welded steel construction with powder-coated pin
- Includes cotter pin

NEW

45805

45804

45809

45803

Part #	Pin Diameter	Usable Pin Length	Pin Finish
45805	1/2"	3-5/8"	Black powder coat
45804	5/8"	4"	Black powder coat
45809 N	3/4"	5-1/2"	Black powder coat
45803	1"	5-1/2"	Black powder coat

2 INCH CLEVIS PIN BALL MOUNT

- Fits any 2" x 2" receiver tube opening
- Clevis pin accepts a tow hook or strap (also compatible with #45803 1" clevis pin)
- Can also be used as a standard ball mount
- Includes clevis pin (trailer ball sold separately)
- Solid steel shank for optimum strength

45821

45821 shown with 40004 ball (not included)

Part #	GTW / TW	Length	Tongue Hole Size	Finish
45821	6,000 / 600 lbs.	8-3/4"	1"	Gloss black

2 INCH & 2½ INCH D-RING SHACKLE AND TOW HOOK MOUNTS

- Fits 2" or 2-1/2" receiver tube openings
- GTW and TW are limited to trailer hitch capacity

45832

45831

45825

45500

Can be used with CURT vehicle recovery strap 83066 or similar

Part #	Shank Size	Description	Length	Finish
45832	2"	Use with tow straps, complete with shackle and solid shank	7-1/2"	Carbide black
45831	2-1/2"	Use with tow straps, complete with shackle and solid shank	7-1/2"	Carbide black
45825	2"	Use with 83066 vehicle recovery strap or similar	7-1/2"	Gloss black
45500	2"	Use with 83066 vehicle recovery strap or similar	10"	Carbide black

TOW HOOKS & TOW STRAP

See page 281 for chain options

- Commonly used on 4WD pickups, SUVs and vans
- Constructed from forged, heat-treated steel
- Spring clip provides added security for rope or strap attachment

83066

22420

22430

22401

22411

Bulk #	Pkg #	Description	Capacity	Break Strength	Finish
--	22401	Tow hook with hardware	10,000 lbs.	--	Chrome-plated
--	22411	Tow hook with hardware	10,000 lbs.	--	Black
22420	--	Tow hook	10,000 lbs.	--	Chrome-plated
22430	--	Tow hook	10,000 lbs.	--	Black
83066	--	Tow strap, 2" wide by 30' long	9,000 lbs. GVW	18,000 lbs.	Nylon

2 INCH SPECIALIZED ADAPTERS

- Fits any 2" x 2" receiver tube opening
- Top receiver increases ground clearance for a cargo carrier or other hitch-mounted accessories
- Top receiver not for towing use
- Provides two receiver tubes for multiple accessories, such as a cargo carrier and a ball mount (#45792)
- Ideal for carrying a bike rack while towing a trailer (#45810)

45794

45792

45810

45794 provides added ground clearance

45792 provides two receiver tubes

45810 provides a ball mount and receiver tube to tow a trailer and an additional accessory

Part #	Description	GTW / TW	Drop	Rise	Length	Hole Size	Finish
45794	Raised receiver adapter (only for use in the rise position)	Not for towing use / 350 lbs.	--	4-1/4"	5-1/4"	--	Gloss black
45792	Dual receiver extender with pin & clip	3,500 / 350 lbs.	--	5-13/16"	8"	--	Gloss black
45810	Multi-use ball mount with pin & clip	7,500 / 750 lbs.	2"	5-13/16"	12-1/4"	1"	Gloss black

ATV | 2 INCH ATV TOWING STARTER KITS

- Kit includes 3-in-1 ATV ball mount, bolt-on ATV adapter and pin & clip
- Never exceed the ATV's maximum tow rating
- Ball mount features a trailer ball, 5/8" hole and a clevis pin
- Adapter bolts onto ATV tongue to provide a 2" x 2" receiver tube
- Welded D-ring accepts tow straps or hooks
- Durable gloss black powder coat finish
- Patent #8,915,514 and #8,276,932

Installs on ATV and provides a variety of hook-up options

No-swivel design

45006

45005

45029

Kit #	Ball Mount #	Adapter #	Ball Diameter	Rise	Length	Hole Size
45029	45005	45006	1-7/8"	1/4"	6"	5/8"
45038	45009	45006	2"	1/4"	6"	5/8"

CAUTION: Use of adapters and extenders can reduce tongue weight or vertical load capacity of the vehicle's hitch. Products under 12" reduce load capacity by 25%. Products over 12" reduce load capacity by 50%.

2 INCH & 2½ INCH & 3 INCH TRAILER HITCH RECEIVER TUBE ADAPTERS & EXTENDERS

Adapters

- Adapts a receiver tube opening to a different size
- #45048 can be cut down from 34" to 24" and has integrated safety chain loops and electrical bracket

Extenders

- Solid steel shank for optimum strength

45785

45790

45770

45775

45013

45789

45791

45781

45795

45796

45048

Adds clearance for a trailer or hitch-mounted accessory (45791)

Moves coupling point farther from the vehicle to avoid obstructions

Measuring adapters and extenders

Length is measured between pin-holes, from center to center

Part #	Adapts From	Adapts To	GTW / TW	Weight Dist. GTW / TW	Length	Finish
Adapters						
45785	1-1/4"	2"	Not for towing use / 350 lbs.	--	6-1/4"	Gloss black
45790	1-1/4"	2"	Not for towing use / 350 lbs.	--	10"	Gloss black
45770	2"	1-1/4"	3,500 / 350 lbs.	--	4"	Gloss black
45775	2"	1-1/4"	3,500 / 350 lbs.	--	9-1/2"	Gloss black
45013	Vertical 2"	Standard 2"	5,000 / 500 lbs.	--	4-1/4"	Gloss black
45048	2-1/2"	2"	4,500 / 450 lbs. 6,000 / 600 lbs.	6,000 / 600 lbs. 8,000 / 800 lbs.	34" 24"	Gloss black
Extenders						
45789	--	--	Not for towing use / 350 lbs.	--	7"	Gloss black
45791	--	--	3,500 / 350 lbs.	--	8"	Gloss black
45781*	--	--	3,500 / 350 lbs.	--	8"	Gloss black
45795	--	--	3,500 / 350 lbs.	--	14"	Gloss black
45796	--	--	3,500 / 350 lbs.	--	18"	Gloss black

* Hollow shank

3 INCH → 2½ INCH → 2 INCH REDUCER SLEEVES

For master and inner pack quantities see page 341

- #45408 set reduces a 3" receiver tube opening to fit a 2" or 2-1/2" shank
- Limited to trailer hitch capacity

45405 - single

45408 - nested set

45409

45408 set includes two reducers to fit multiple accessories

Reduces the receiver tube opening to fit smaller shank sizes

Part #	Reduces From	Reduces To	Length	Finish
45405	2-1/2"	2"	5-1/2"	Carbide black
45409	3"	2-1/2"	6-1/4"	Carbide black
45408*	3"	2-1/2"	6-1/4"	Carbide black
	2-1/2"	2"		

* 2-1/2" to 2" inner sleeve only designed for 2-1/2" receiver tubes with 2-1/4" from the collar to the hitch pin hole

How to use a reducer sleeve

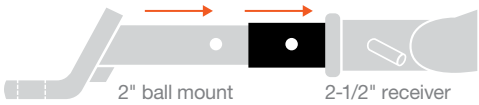

1¼ INCH & 2 INCH VERTICAL RECEIVER TUBE BALL MOUNTS

- Converts a vertical receiver tube into a ball mount tongue (#45507, #45003)
- Adapts a 2" vertical receiver into a 2" standard receiver (#45013)

45507

45003

45013

Part #	Shank Size	GTW / TW	Tongue Hole Size	Adapts From	Adapts To	Length	Finish
45507	1-1/4"	3,500 / 300 lbs.	3/4"	Vertical 1-1/4"	Ball mount tongue	9-3/4"	Gloss black
45003	2"	4,000 / 400 lbs.	1"	Vertical 2"	Ball mount tongue	9"	Gloss black
45013	2"	5,000 / 500 lbs.	--	Vertical 2"	Standard 2"	4-1/4"	Gloss black

TOWING SECURITY

HITCH PINS & CLIPS

For master and inner pack quantities see page 341

- Secures ball mounts and other receiver tube inserts
- Bent handle for an easier grip

Bent handle for an easier grip during insertion and removal

Vinyl-coated pin & clip for a more solid, easy grip (select models)

Grooved pin allows clip insertion at any angle (select models)

High-strength steel construction with a durable zinc-plated finish

Bulk #	Pkg #	Three-Pack#	Fits Tube Size	Pin Diameter	Finish	Clip Attachment
21400	21401	--	1-1/4" x 1-1/4"	1/2"	Zinc-plated	Hole
21403	21404	--	1-1/4" x 1-1/4"	1/2"	Zinc-plated	Groove
21410	21411	--	1-1/4" x 1-1/4"	1/2"	Zinc-plated, coated grip	Hole
--	21502	--	1-1/4" x 1-1/4" 2" x 2"	1/2" 5/8" adapter	Zinc-plated	Hole
21500	21501	--	2" x 2"	5/8"	Zinc-plated	Hole
21504	21505	--	2" x 2"	5/8"	Zinc-plated	Groove
21510	21511	--	2" x 2"	5/8"	Zinc-plated, coated grip	Hole
21578	21579	--	2" x 2"	5/8"	Black zinc-plated	Hole
21580	21581	--	2" x 2" 2-1/2" x 2-1/2"	5/8"	Zinc-plated	Hole
21582	21583	--	2" x 2" 2-1/2" x 2-1/2"	5/8"	Zinc-plated	Groove
21507	21506	--	2-1/2" x 2-1/2" 3" x 3"	5/8"	Zinc-plated	Groove
21600	21601	21602	--	Fits 1/2" or 5/8"	Zinc-plated	--

SWIVEL HITCH PINS

For master and inner pack quantities see page 341

- Quickly secures ball mounts and other receiver tube inserts with no clip needed
- Permanently attached swivel clip cannot be lost
- Bent handle for an easier grip

21541

23581

23582

21551

21561

Part #	Fits Tube Size	Pin Diameter	Finish	Description
21541	1-1/4" x 1-1/4"	1/2"	Chrome-plated	Swivel pin
23581	1-1/4" x 1-1/4"	1/2"	Stainless steel	Swivel pin
21551	2" x 2"	5/8"	Chrome-plated	Swivel pin
23582	2" x 2"	5/8"	Stainless steel	Swivel pin
21561	1-1/4" x 1-1/4"	1/2"	Zinc-plated	Swivel pin
	2" x 2"	5/8"		with adapter sleeve

Quickly secures shank with no additional clip needed

SAFETY PINS

- Quickly secures coupler latches, pintle hooks, jack legs or caster wheels
- Square retainer wire clip provides added clearance
- Protected by a durable zinc-plated finish

25034 25035

28000 28001

25080 25081

25010 25011

28278 28279

25012 25013

Bulk #	Pkg #	Pin Diameter	Pin Length	Chain Length
25080	25081	1/4"	2-3/4"	--
25012	25013	1/4"	2-3/4"	12" chain
25010	25011	5/16"	3"	--
25034	25035	5/16"	3"	12" chain
28278	28279	3/8"	2-3/4"	--
28000	28001	3/8"	3"	12" chain

25034 securing a coupler latch

28278 securing a jack foot

HITCH LOCKS

For master and inner pack quantities see page 341

- Easy-to-operate, 1/4-turn lock activation
- Watertight dust cap prevents internal corrosion
- Two keys included for added convenience
- Space-saving, full-color retail packaging

23506

23502

23504

23510

23516

23517

23515

23501

23528

23519

23024

23020

23021

Part #	Fits Tube Size	Pin Diameter	Finish	Lock Style
23020	1-1/4" x 1-1/4"	1/2"	Chrome-plated	Dead bolt
23501	1-1/4" x 1-1/4"	1/2"	Chrome-plated	Barbell
23024	1-1/4" x 1-1/4" 2" x 2"	1/2" 5/8"	Chrome-plated	Dead bolt with adapter sleeve
23517	1-1/4" x 1-1/4" 2" x 2"	1/2" 5/8"	Stainless steel	Barbell with adapter sleeve
23506	1-1/4" x 1-1/4" 2" x 2"	1/2" 5/8"	Chrome-plated with blue anodized aluminum	Barbell, right angle with adapter sleeve
23515	2" x 2"	5/8"	Chrome-plated	Barbell
23516	2" x 2"	5/8"	Stainless steel	Barbell
23518	2" x 2"	5/8"	Black	Barbell
23502	2" x 2"	5/8"	Stainless steel with blue anodized aluminum	Barbell, right angle
23510	2" x 2"	5/8"	Chrome-plated	Barbell, right angle
23528	Up to 2-1/2"	5/8"	Chrome-plated	Barbell
23519	Up to 2-1/2"	5/8"	Stainless steel	Barbell
23504	Up to 2-1/2"	5/8"	Chrome-plated with blue anodized aluminum	Barbell, right angle
23021	Up to 3"	5/8"	Chrome-plated	Dead bolt
23025	Up to 3"	5/8"	Chrome-plated	Barbell

23518

23025

HITCH & COUPLER LOCK SETS

- Lock sets locks keyed alike for convenient one-key operation
- Easy-to-operate, 1/4-turn lock activation
- Watertight dust caps prevent internal corrosion
- Space-saving, retail packaging

23526

23527

23505

23083

Part #	Fits Tube Size	Fits Latch Span	Fits Coupler	Lock Pin Diameter	Coupler Pin Diameter	Finish	Includes
23526	2" x 2"	7/8"	Latches	5/8"	1/4"	Chrome-plated	Hitch lock (23515) & coupler lock (23520)
23527	2" x 2"	2-1/2"	Latches	5/8"	1/4"	Chrome-plated	Hitch lock (23515) & coupler lock (23522)
23505	2" x 2"	Adjustable from 1" to 3"	Latches	5/8"	1/4"	Chrome-plated	Hitch lock & coupler lock (23503)
23083	Up to 2-1/2"	Adjustable from 1" to 3"	Latches and 1-7/8", 2" and 2-5/16" couplers	5/8"	1/4"	Chrome-plated (hitch & coupler lock) Orange polymer (coupler lock)	Hitch lock (23504) & coupler lock (23082)

UNIVERSAL TRI-BALL COUPLER LOCK

- Highly theft and tamper-resistant design
- Simple lasso design keeps all parts together
- Glass-filled orange polymer for high strength and increased visibility
- Easy-to-operate, 1/4-turn lock activation
- Keyed-alike for added convenience (#23083)
- Patent # US11577564B2

23083

23082

Unique tri-ball inserts into coupler and secures latch with lasso lock

Coupler lock can also be used while towing to secure the trailer

Built-in safety points allow the ball to break off when forcefully tampered with, leaving the ball in the coupler and blocking hookup

Part #	Fits Coupler Size	Fits Tube Size	Fits Latch Span	Coupler Pin Diam.	Includes
23082	1-7/8", 2" and 2-5/16"	--	Adjustable from 1" to 3"	1/4"	Coupler lock only
23083	1-7/8", 2" and 2-5/16"	2" x 2"	Adjustable from 1" to 3"	1/4"	Hitch lock (23504)

COUPLER LATCH LOCKS

- Easy-to-operate, 1/4-turn lock activation
- Watertight dust cap prevents internal corrosion
- Two keys included for added convenience
- Space-saving, full-color retail packaging

23546

23022

23521

23520

23522

23523

23503

Part #	Fits Latch Span	Pin Diameter	Finish	Lock Style
23546	3/4"	1/4"	Solid brass	Padlock
23022	3/4"	1/4"	Brass-plated	Padlock
23521	3/4"	1/4"	Black	Padlock
23520	7/8"	1/4"	Chrome-plated	Barbell
23522	2-1/2"	1/4"	Chrome-plated	Barbell
23523	3-3/8"	1/4"	Chrome-plated	Barbell
23503	Adjustable from 1" to 3"	1/4"	Chrome with blue anodized aluminum	Barbell, right angle

Secure your trailer from theft (23503 shown)

UNIVERSAL TRAILER COUPLER LOCK

NEW

- Prevents trailer ball from being inserted into the coupler
- Built with hardened steel and chrome-plated U-lock
- Bright color provides high-visibility theft deterrence
- U-lock inside width of 3-7/8" fits most trailers
- Includes two keys for added convenience

23090

Deters theft by occupying and securing the coupler with a durable ratcheting lock

Insert the U-lock into the lock base and push downwards to set and secure the lock

Works with virtually all couplers, making it easy to use the lock on multiple trailers

Part #	Fits Coupler Sizes	U-Lock Width	Finish
23090 N	1-7/8", 2" and 2-5/16"	3-7/8" (inside)	Gloss orange powder coat

N = NEW PRODUCT

5TH WHEEL HITCH LOCK

- Locks a 5th wheel hitch into the rails, taking the place of a pin & clip
- Extra-long 1/2" diameter pin fits all industry-standard base rails
- Weather-resistant dust cap helps prevent internal corrosion
- Easy-to-access, 1/8-turn lock activation
- Includes two keys for added convenience

Part #	Pin Diameter	Finish
23256	1/2"	Black powder-coated aluminum

23256

Key slot angled upward for easier ergonomic access

Flush-mount on the base rail for enhanced security

KINGPIN LOCK

- Locks on to 5th wheel kingpin to deter theft
- Built with an aluminum body for corrosion resistance
- Two keys included for added convenience
- Space-saving, full-color retail packaging

23255

Universal design fits most 5th wheel trailer kingpins

Part #	Description	Finish
23255	5th wheel trailer kingpin lock	Chrome-plated steel and powder-coated aluminum

MULTI-USE DISK LOCKS

- Strong stainless steel body and hardened shackle for improved security
- Four-pin cylinder and dual locking mechanism helps prevent picking
- Weather-resistant finish avoids rust and corrosion
- Great for securing trailers, sheds and storage rooms
- Three-pack locks are keyed alike

23084

23085

Part #	Includes	Finish
23084	One lock	Stainless steel
23085	Three locks	Stainless steel

Shrouded disc design prevents attempts at cutting or prying

MULTI-USE CABLE LOCK

- Features versatile locking and cinching capabilities
- Protected by a vinyl coating for rust resistance

23666

Secures bike racks and cargo to deter theft

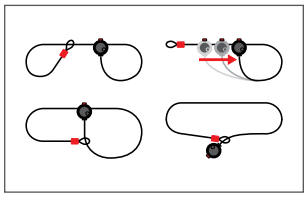

Features versatile locking and cinching capabilities

Part #	Length	Cable	Finish
23666	6'	3/8" diameter	Vinyl-coated, braided steel

SPARE TIRE LOCK

- Fits side-mount spare tires
- Includes two keys for added convenience

23562

Secures spare tires to deter theft

Protected by a durable chrome-plated finish

Part #	Fits	Finish
23562	Side-mount spare tires	Chrome-plated

WHEEL CHOCK LOCK

- Chocks and locks the wheel to prevent roll-away
- Expandable width fits most tire sizes
- Three keys included for added convenience

Secures unattended trailers or vehicles by clamping on the wheel

Red rubber-coated arms protect the wheel's finish

23175

Part #	Fits Tire Sizes					Finish
23175	4.8" - R12	195 / 75R14	205 / 70R15	225 / 75R15	235 / 80R16	Yellow powder coat with red rubber-coated arms
	7.5" - R16	205 / 60R16	215 / 70R15	235 / 75R15	33" x 12.5" - R15	

TIRE LINC® AUTO TIRE PRESSURE MONITORING SYSTEM

NEW

- Provides push notifications when hazardous conditions occur to prevent blowouts
- Connects wirelessly through your smartphone via Bluetooth connection
- Repeater technology strengthens wireless signal for reliable connectivity
- Can be permanently wired with provided splice-in wiring harness
- Includes rechargeable lithium-powered battery for up to 60 hours of active use
- Automatically enters low-power mode when not in motion to preserve battery
- IP67-rated construction is dustproof and waterproof up to one meter
- Easy, do-it-yourself installation
- Portable design allows use with multiple trailers
- Sensors come with replaceable CR1632 batteries
- Additional trailer mounting brackets sold separately

OneControl® Auto BY LIPPERT

Download the new OneControl® Auto app!

AUTO

Download on the App Store

Google Play

57009

57011

57017

57018

57019

Provides real-time alerts

Actively monitors tire pressures and temperatures in real-time from a smartphone

Water-proof IP67 design

IP67-rated construction is dustproof and waterproof up to one meter

Monitor multiple tires

Monitor up to 20 tires simultaneously (additional sensors sold separately (#57011))

Part #	Description	Includes
57009 N	Tire Linc kit	Repeater, mounting bracket, hardware, four sensors, 120V USB wall charger and splice-in harness
57011 N	Tire Linc sensors	Two sensors
57017 N	Mounting plate	One mounting plate
57018 N	Splice-in charging cable	One splice-in charging cable
57019 N	USB charging cable	One USB charging cable

TRAILER SAFETY CHAIN HOLDER BRACKETS

- Provides intermediate hangers to keep safety chains off the ground (not intended as a safety chain secure point)
- Requires clearance on the shank between receiver collar and accessory (see table)
- Hooks maintain proper safety chain function for trailer disconnect

45807

45806

Provides intermediate hangers to keep chains off the ground

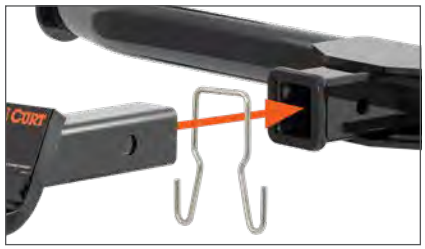

Easily clips onto most 2" shanks (#45807)

Part #	Fits	Style	Required Clearance	Includes	Finish
45806	2" shanks	Bolt-on	5/8"	Bracket and hardware	Yellow zinc-plated
45807	2" shanks	Clip-on	1/4"	Bracket only	Stainless steel

TRAILER-MOUNTED HD RUBBER WHEEL CHOCKS

- Convenient storage prevents dirt inside your truck or RV
- Snap-ring clips with wire lanyard store chocks and prevent lost pieces
- Ridged bottom surface prevents chock slip and movement
- Heavy-duty rubber and steel construction provides long-lasting durability

22802

Quickly mounts your wheel chocks to your trailer frame for easy storage

Large handles in wheel chocks provide easy carrying and use

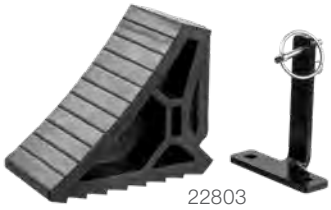
22803

Part #	Includes
22801	One wheel chock
22803	One wheel chock, single-mount bracket and mounting hardware
22802	Two wheel chocks, dual-mount bracket and mounting hardware

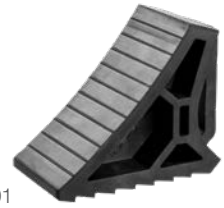
22801

WHEEL CHOCK SET

- Raised tread offers a better grip on the wheel
- Saw-tooth edges on the base provide solid traction on the ground
- Always to be used with emergency brake
- Not for commercial use

22800

Adds safety during vehicle maintenance or to parked trailers

Part #	Description
22800	For use with wheels up to 17" wide

ANTI-RATTLE HITCH CLAMPS & PINS

Clamp-style

- Compatible with hollow and solid shank accessories
- No-tool installation and easy-to-adjust clamp lever
- Lightweight aluminum and high-strength steel

Pin-style

- Stops rattling and prevents shank movement
- Compatible with hollow shank accessories

22325

22320

22315

22323

Stops rattling and prevents shank movement for hollow and solid shanks (clamp-style)

No-tool installation and easy-to-adjust clamp lever (clamp-style)

Insert into hollow-shanks to prevent sway and stop rattling (pin-style)

Part #	Fits Shank Type	Fits Tube Size	Pin Diameter	Clip Attachment	Finish
Clamps					
22325	Hollow or solid	2" x 2"	--	--	Clear
22320	Hollow or solid	2-1/2" x 2-1/2"	--	--	Clear
Pins					
22315	Hollow only	1-1/4" x 1-1/4"	1/2"	Hole	Yellow zinc-plated
22323	Hollow only	2" x 2"	5/8"	Groove	Yellow zinc-plated

SECURELATCH™ SERIES
AUTO-LOCKING TECHNOLOGY

SecureLatch™ streamlines the trailer hookup process with a revolutionary auto-locking design. Unlike any other coupling device, the primary latching mechanism automatically locks into place as you back up to the coupler. No manual coupling required! Simply insert the secondary safety pin, and you're ready to tow.

Scan to learn more

How Auto-Locking Technology Works

1. Strike the plate.

As you back up the vehicle, a built-in back plate helps position the coupler or lunette ring for easier hookup

2. Lower the trailer.

As the coupler is lowered onto the pintle hitch, SecureLatch automatically locks without any manual coupling required

3. Tow with confidence.

Finally, insert the secondary safety pin, connect the safety chains and you're ready to tow with confidence and without chucking

What Makes Securelatch™ Different?

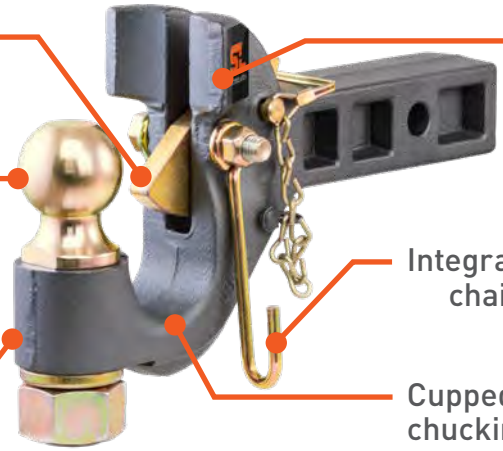

Offering a full series of hooks, mounts, channels and lunette rings!

PINTLES & MOUNTS

SECURELATCH™ PINTLE HOOKS & HITCHES

For lunette rings and pintle mounts see pages 122 & 123

- Non-shank models fit slotted SecureLatch™ or standard pintle mounts (holes spaced 1-3/4" high x 3-5/16" wide)
- Latch can be pinned in open position to clear standard trailer coupler (excluding hook models #48405, #48505)
- Textured, dark grey teridium finish for a premium look
- Yellow zinc-plated components for long-lasting corrosion resistance (bolt kit sold separately)
- Informative, full-color retail box or shank label
- U.S. patent# 9,789,742; Canadian patent# 2,836,683, 3,040,259 and 3,044,875; Australian patent# 2014366795; European patent# 14871983.4

48407

48406

48405

48411

48410

48505

Bulk #	Pkg #	GTW*	Ball Capacity	Fits Tube Size	Ball Diameter	Overall Length	Ball Length	Hook Length	Fits Lunette Ring
Receiver-Mount Ball & Pintle Hitches									
48407	--	14,000 lbs.	10,000 lbs.	2"	2"	12-1/2"	9"	7"	2-1/2" or 3" I.D.
48406	--	14,000 lbs.	14,000 lbs.	2"	2-5/16"	12-1/2"	9"	7"	2-1/2" or 3" I.D.
Receiver-Mount Pintle Hooks									
48405	--	14,000 lbs.	--	2"	--	13-1/2"	--	9"	2-1/2" or 3" I.D.
Ball & Pintle Hitches									
--	48411	20,000 lbs.	10,000 lbs.	--	2"	--	--	--	2-1/2" or 3" I.D.
--	48410	20,000 lbs.	14,000 lbs.	--	2-5/16"	--	--	--	2-1/2" or 3" I.D.
Pintle Hooks									
--	48505	30,000 lbs.	--	--	--	--	--	--	2-1/2" or 3" I.D.

* Vertical load not to exceed 15% GTW or tow vehicle vertical weight limit

SLOTTED BOLT PLATE FOR MAXIMUM ADJUSTABILITY

SECURELATCH™ ADJUSTABLE PINTLE MOUNTS

Scan to learn more

- Slotted bolt plate provides max adjustability, instead of fixed height positions
- Quick, easy, one-tool height adjustments – no disassembly required
- Torqued bolt plates provide 48,000 lbs. total clamp load for secure connection
- Accepts SecureLatch™ pintle hooks and ball hitches (sold separately)
- Cast iron construction is austempered for superior strength and wear resistance (#48016)
- High-strength cast steel construction (#48011)
- Textured, dark grey teridium finish for a premium look on your vehicle
- Yellow zinc-plated hardware for long-lasting corrosion resistance
- See page 121 for pintles

48011

48016

Measuring a pintle mount

See table for corresponding measurements

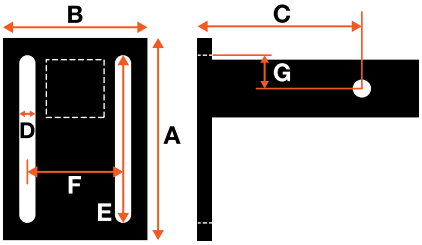

Bulk #	GTW	Plate Height (A)	Plate Width (B)	Shank Length (C)	Slot Width (D)	Slot Height (E)	Slot Space Width (F)	Top Slot Height (G)
For 2" x 2" Receiver Tube Openings								
48011	20,000 lbs.	9-1/2"	5"	6-7/8"	17/32"	7-3/4"	3-3/8"	1"
For 2-1/2" x 2-1/2" Receiver Tube Openings								
48016	20,000 lbs.	10-5/8"	5"	7-1/4"	17/32"	9"	3-3/8"	1-5/16"

SECURELATCH™ FLUSH-MOUNT LUNETTE RING

For pintles and mounts go to pages 121 & 121

- Vertically offset base allows ring to be flipped for maximum height adjustment
- Drop-in pin accepts lock to deter theft (turns 90 degrees while coupled)
- Cast iron construction is austempered for superior strength and wear resistance
- Textured, dark grey teridium finish for a premium look on your trailer
- Yellow zinc-plated pin for long-lasting corrosion resistance

48661

Drop-in pin accepts lock to deter theft (turns 90° while coupled)

Part #	GTW	Rings Hole Size	Ring Thickness	Bolt Hole Spacing	Base Size
48661	60,000 lbs.	2-1/2" I.D.	1-1/2"	4-1/2" center to center	6-1/4" square

SECURELATCH™ CHANNELS & LUNETTE RINGS

Scan to learn more

- Drop-in pin accepts lock to deter theft (turns 90 degrees while coupled)
- Strong 2-hole bolt pattern fits 3" channel only (#48625)
- Heavy-duty 3-hole bolt pattern fits 2-3/4" channel only (#48626)
- Cast iron construction for superior strength and wear resistance
- Hardware included with #48641 kit only
- Textured, dark grey teridium finish for a premium look on your vehicle (lunette rings only)
- Raw finish for immediate welding (channels only)
- Yellow zinc-plated pin for long-lasting corrosion resistance
- U.S. patent# 5,527,356; Canadian patent# 2,823,001; Australian patent# 2014305601

48625

48626

48641

48651

48610

48650

Bulk #	Pkg #	GTW	Number of Positions	Ring Hole Size	Ring Thickness	Vertical Hole Spacing	Channel Width	Channel Height	Description
--	48625	25,000 lbs.	--	3" I.D.	1-1/2"	2" on center	3" I.D.	--	Lunette ring only
--	48626	40,000 lbs.	--	3" I.D.	1-1/2"	2" on center	2-3/4" I.D.	--	Lunette ring only
--	48641	40,000 lbs.	4-position	3" I.D.	1-1/2"	2" on center	2-3/4" I.D.	11-3/4"	Lunette ring and channel
48651	--	--	4-position	--	--	2" on center	2-3/4" I.D.	11-3/4"	Channel fits 48626 only
48610	--	--	3-position	--	--	2" on center	3" I.D.	7-1/2"	Channel only
48650	--	--	5-position	--	--	2" on center	3" I.D.	11-3/4"	Channel only

2 INCH & 2½ INCH FORGED PINTLE HOOKS & HITCHES

- Receiver style available to fit 2" or 2-1/2" receiver tube openings
- Flush-mount style fits any CURT pintle mount (excl. SecureLatch™)
- Spring-loaded locking arm for secure coupling
- Constructed from forged steel for superior strength
- Changeable trailer ball features a hard chrome finish (select models)
- Includes safety pin and bolt kit where applicable (hitch pin sold separately)

48005
48004

48010

48006
48007

48012

48180
48190
48200

48205
48210
48215
48231

Bulk #	Pkg #	GTW*	Ball Capacity	Fits Tube Size	Ball Diameter	Overall Length	Ball Length	Hook Length	Fits Lunette Ring
Receiver-Mount Ball & Pintle Hitches									
48006	--	16,000 lbs.	12,000 lbs.	2"	2-5/16"	15-1/4"	11-1/4"	9-1/2"	2-1/2" or 3" I.D.
48007	--	16,000 lbs.	10,000 lbs.	2"	2"	15-1/4"	11-1/4"	9-1/2"	2-1/2" or 3" I.D.
48012	--	20,000 lbs.	20,000 lbs.	2-1/2"	2-5/16"	15"	11"	9-1/2"	2-1/2" or 3" I.D.
Receiver-Mount Pintle Hooks									
48005	--	10,000 lbs.	--	2"	--	14-1/2"	--	9-1/2"	2-1/2" I.D.
48004	--	20,000 lbs.	--	2"	--	14-1/2"	--	9-1/2"	2-1/2" I.D.
48010	--	20,000 lbs.	--	2-1/2"	--	14-3/4"	--	9-1/2"	2-1/2" I.D.
Ball & Pintle Hitches									
--	48180	16,000 lbs.	6,000 lbs.	--	1-7/8"	--	--	--	2-1/2" or 3" I.D.
--	48190	16,000 lbs.	10,000 lbs.	--	2"	--	--	--	2-1/2" or 3" I.D.
--	48200	16,000 lbs.	16,000 lbs.	--	2-5/16"	--	--	--	2-1/2" or 3" I.D.
Pintle Hooks									
--	48205	10,000 lbs.	--	--	--	--	--	--	2-1/2" or 3" I.D.
--	48210	20,000 lbs.	--	--	--	--	--	--	2-1/2" or 3" I.D.
--	48215	30,000 lbs.	--	--	--	--	--	--	2-1/2" or 3" I.D.
--	48231	60,000 lbs.	--	--	--	--	--	--	2-1/2" or 3" I.D.

* Vertical load not to exceed 15% GTW or tow vehicle vertical weight limit

2 INCH & 2½ INCH PINTLE MOUNTS

- Mounts any CURT flush-mount style pintle hook or ball & pintle hitches
- Height adjustment allows for precise trailer leveling (for use in drop position only)
- Bent face plate and solid shank provides superior strength (#48343)
- 2-1/2" shank is ideal for class 5 Commercial Duty hitches (page 13)
- Protected by a highly durable carbide black powder coat finish
- Informative, full-color retail labels

Measuring a pintle mount

See table for corresponding measurements

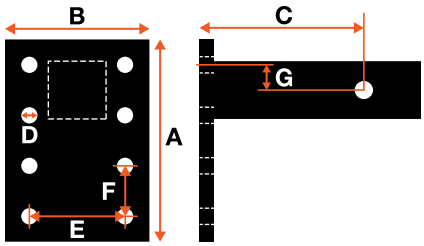

48326
48327

48323
48324
48328
48325

48343

48341
48342

48340

48329

48348

48349

Part #	GTW	Pintle Positions	Plate Height (A)	Plate Width (B)	Shank Length (C)	Hole Size (D)	Hole Space Width (E)	Hole Space Height (F)	Top Hole Height (G)
For 2" x 2" Receiver Tube Openings									
48326	20,000 lbs.	1-position	3-1/2"	5"	6"	9/16"	3-5/16"	1-3/4"	7/8"
48327	20,000 lbs.	1-position	3-1/2"	5"	8"	9/16"	3-5/16"	1-3/4"	7/8"
48323	10,000 lbs.	3-position	7"	5"	6"	9/16"	3-5/16"	1-3/4"	7/8"
48324	10,000 lbs.	3-position	7"	5"	8"	9/16"	3-5/16"	1-3/4"	7/8"
48328	15,000 lbs.	3-position	7"	5"	6"	9/16"	3-5/16"	1-3/4"	7/8"
48325	15,000 lbs.	3-position	7"	5"	8"	9/16"	3-5/16"	1-3/4"	7/8"
48343	17,000 lbs.	3-position	7-1/4"	6-1/2"	6"	9/16"	3-5/16"	1-3/4"	7/8"
48341	10,000 lbs.	6-position	13"	5"	10"	9/16"	3-5/16"	1-3/4"	7/8"
48342	10,000 lbs.	6-position	13"	5"	12"	9/16"	3-5/16"	1-3/4"	7/8"
For 2-1/2" x 2-1/2" Receiver Tube Openings									
48340	20,000 lbs.	1-position	3-1/2"	5"	8"	9/16"	3-5/16"	1-3/4"	7/8"
48329	18,000 lbs.	3-position	7"	5"	8"	9/16"	3-5/16"	1-3/4"	7/8"
48348	20,000 lbs.	3-position	7-1/4"	5"	7-1/8"	9/16"	3-5/16"	1-3/4"	7/8"
48349	20,000 lbs.	6-position	12-1/2"	5"	7-1/8"	9/16"	3-5/16"	1-3/4"	7/8"

HITCH ACCESSORIES

1¼ INCH & 2 INCH & 2½ INCH RUBBER HITCH TUBE COVERS

- Protects 1-1/4", 2" or 2-1/2" receiver tube opening
- Adds a clean, finished look and keeps debris out

22275

22276

22278

22279

21728

Bulk #	Pkg #	Fits Tube Size	Style	Material
22271	22275	1-1/4" x 1-1/4"	Friction fit	Black rubber
22272	22276	2" x 2"	Friction fit	Black rubber
22279	--	2" x 2"	Friction fit with tube collar	Black rubber
--	21728	2" x 2"	Tube collar with 4-flat holder	Black rubber
22277	22278	2-1/2" x 2-1/2"	Friction fit	Black rubber

Friction fit does not require a pin & clip to hold in place

Convenient holder mounts a 4-way flat connector (21728)

1¼ INCH & 2 INCH STEEL & PLASTIC HITCH TUBE COVERS

- Adds a clean, finished look and keeps debris out
- Available in high-strength steel or rust-free plastic
- Securely mounts using a pin and clip (not included)

22101

22111 & 22171

22751 & 22181

Bulk #	Pkg #	Fits Receiver Tube Size	Finish
Steel Hitch Tube Covers			
22100*	22101	2" x 2"	Chrome-plated
--	22111	2" x 2"	Chrome-plated
22750	22751	2" x 2"	Black
Plastic Hitch Tube Covers			
22170	22171	2" x 2"	Chrome-plated
--	22181	2" x 2"	Black

* Continued while supplies last

Protects receiver tube openings when not being used for towing

PROTECTIVE GM MULTIPRO™ / MULTI-FLEX™ TAILGATE SENSORS

For more information go to page 160

- Prevents deployment of inner tailgate panel when ball mount is installed
- Helps avoid costly tailgate damage
- Easy installation requires no wire cutting or splicing
- No extra electronic components or batteries required
- Sleek, durable design suited for all work conditions

NEW

58267

NEW

58268

Part #	Fits Receiver Size	Includes
58267 N	2"	Sensor cap and wiring harness
58268 N	2-1/2"	Sensor cap and wiring harness

2 INCH GRIP STEP™ HITCH STEPS

- Fits any 2" x 2" receiver tube opening
- Provides a 26" hitch-mounted step on the front or rear of the vehicle
- Fleet-approved, expanded metal treads for maximum traction and safety
- Powder-coated aluminum construction to be strong, lightweight and rust-free
- 6" drop provides easier access into larger vehicles (designed for use in drop position only - #32002)
- Includes hitch pin & clip

32001

32002

Part #	Drop	Step Finish	Shank Finish
32001	--	Textured black	Black
32002	6"	Textured black	Black

2 INCH HITCH-MOUNTED ACCESSORIES

- Fits any 2" x 2" receiver tube opening
- For cargo carriers, bikes racks and other cargo solutions, see page 300

31001

31002

31007

31010

31006

Part #	Description
31001	Step pad with anti-skid surface
31002	License plate holder
31007	Skid shield
31010	Winch mount
31006	Spare tire mount (mounting hardware not included)

Step pad provides easy under-the-hood access (31001)

Extra protection for the front or rear and hitch (31007)

Allows a winch to be easily attached to a receiver

24" height accepts multiple tire sizes (31006)

EXTENDED VIEW TOW MIRROR

- Compatible with pickup or SUV left or right side mirror
- Fully adjustable design can be used in horizontal or vertical position
- Hinging arm and elastic straps provide easy and secure installation

Attaches to side mirror to expand view with a trailer

Articulating head allows precise angling

20002

Part #	Adds	Fits
20002	5" to 7-1/2" to existing mirror	Mirrors 4" to 11" high

FISH WIRE

- Makes it easier to lead bolts and spacers through tough-to-reach holes
- Ideal for installing a trailer hitch on a vehicle with a hollow frame
- Coiled end accepts threaded bolts

Part #	Length	Coil Diameter	Material
58390	18"	3/8"	Spring steel
58410	18"	7/16"	Spring steel
58400	18"	1/2"	Spring steel
58430	18"	5/8"	Spring steel

Ideal for installing a trailer hitch on a vehicle with a hollow frame

Makes it easier to lead hardware through tough-to-reach holes

PROFESSIONAL FINISHING PACK

- Great for hitch and wiring installations
- Features 11 commonly used automotive trim panel retainers and frame hole plugs

Part #	Description
22322	50 automotive finishing pieces in a poly bag

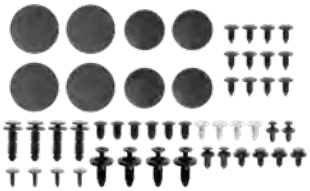

22322

HITCH ACCESSORY WALL MOUNT

- Simple, multi-function bracket to store hitch accessories when not in use
- Adds functionality to garages, sheds, shops or other storage spaces
- Great for holding cargo carriers, bike racks, ball mounts, tow bars and more
- Compatible with virtually any 2" shank hitch accessory
- Also compatible with 1-1/4" accessories in the vertically mounted position
- Strong, welded steel construction with durable A-coat and powder coat finish

45069

Improves garage organization by keeping accessories off the floor

Horizontal and vertical openings to mount accessories in either orientation

Narrow faceplate allows installation on a 2x4 stud or similar

Part #	Capacity	Includes	Finish
45069	350 lbs.	Bracket and two lag bolts	Gloss black

TOWING ACCESSORIES STORAGE BAG

- Great for chains, straps, greasy gooseneck ball and safety chain attachments
- Durable fabric with high-strength webbing straps
- Zipper closure to keep items secure
- Comfort-grip handles for easy portability

70004

Features 14 pockets for storage of small components

Great for storing and carrying towing accessories and related tools

Metal lining along the opening keeps bag open and upright for easy access

Part #	Inside Length	Inside Width	Inside Depth
70004	15"	8"	8"

POWER PRO MAX™ PORTABLE PRESSURE WASHER BY LIPPERT

- Battery powered, no fuel or power cords required
- Fast, three-hour charging time per battery
- Includes long and rotatable nozzles
- 6-in-1 spray attachment and 25 oz. soap bottle
- Includes two 40V lithium ion batteries
- Runs up to 26 minutes on high pressure and 35 minutes on low
- Cannot be connected to a garden hose

2020217218

Lightweight, portable design for at-home cleaning jobs or for spraying down camping gear, boats, piers, ATVs and more

6-in-1 spray attachment with long and short rotatable spray nozzles allow you to choose your cleaning style for every job

No hose, fuel or power cords required; simply drop your line in any water source and start cleaning

Part #	Run Time	Pressure	Weight
2020217218	26 mins on high / 35 mins on low	520 max PSI	3.6 lbs.

FAB COMPONENTS

RAW STEEL RECEIVER TUBING

- Raw finish allows for immediate welding
- 1/2" reinforcing collar for increased strength
- Features a pre-drilled hitch pin hole

49506

49060

49090

Part #	Finish	Receiver Tube Size	Tube Length
49506	Raw	1-1/4" x 1-1/4"	6"
49512	Raw	1-1/4" x 1-1/4"	12"
49524	Raw	1-1/4" x 1-1/4"	24"
49060	Raw	2" x 2"	6"
49090	Raw	2" x 2"	9"
49120	Raw	2" x 2"	12"
49180	Raw	2" x 2"	18"
49240	Raw	2" x 2"	24"
49360	Raw	2" x 2"	36"
49480	Raw	2" x 2"	48"
49516	Raw	2-1/2" x 2-1/2"	6"
49510	Raw	2-1/2" x 2-1/2"	10"
49511	Raw	2-1/2" x 2-1/2"	18"
49517	Raw	3" x 3"	12"
49518	Raw	3" x 3"	18"

2 INCH RAW STEEL HITCH BARS

- Raw finish allows for immediate welding
- Rounded corners for easier insertion into the receiver
- Constructed from high-strength, hot-rolled steel
- Features a pre-drilled hitch pin hole

49537

49532

Part #	Finish	Bar Length	Shank Size
49537	Raw	8"	2" x 2"
49529	Raw	10"	2" x 2"
49530	Raw	12"	2" x 2"
49531	Raw	14"	2" x 2"
49533	Raw	18"	2" x 2"
49536	Raw	24"	2" x 2"

WELD-ON ACCESSORIES

- Reinforcing collar provides added strength (#49770)
- Accepts 2x4 studs or adds a tie-down for straps and chains (#83072)
- Provides a safety chain attachment point (#49950)

49950

83072

49770

Part #	Description	GTW / TW	Receiver Tube Size	Inside Width	Inside Depth	Finish
49770	Reinforcement collar	--	2" x 2"	--	--	Raw
83072	Stake pocket	--	--	3-1/2"	1-5/8"	Raw
49950	Safety chain loop	10,000 lbs.	--	--	--	Raw

REPLACEMENT PARTS

TRAILER BALL HARDWARE KITS

40103

40104

40105

Part #	Description	Fits
40103	3/4" nut and lock washer, qty 1	3/4" shanks
40104	1" nut and lock washer, qty 1	1" shanks
40105	1-1/4" nut and lock washer, qty 1	1-1/4" shanks

ADJUSTABLE DUAL-BALL MOUNTS

45931

19274

45960

Part #	Description	Fits
45931	Accessory mount pins, qty 2	45935, 45936, 45937, 45939, 45933, 45934
45960	Accessory mount clip, qty 1	
19274	Anti-rattle bumper with screw, qty 1	

SWITCH BALL™ TRAILER BALLS

41780

42780

42200

42203

41341

Part #	Description	Fits
41780	1-7/8" trailer ball, qty 1 - 6,000 lbs GTW - 1" neck hole diameter	42178, 41782
42780	1-7/8" trailer ball, qty 1 - 8,000 lbs GTW - 1-1/8" neck hole diameter	42225, 42280
42200	2" trailer ball, qty 1 - 8,000 lbs GTW - 1-1/8" neck hole diameter	42225, 42280
42203	2-5/16" trailer ball, qty 1 - 8,000 lbs GTW - 1-1/8" neck hole diameter	42225, 42280
41341	Shank, qty 1 - 3,500 lbs GTW - 2-1/4" length - 3/4" shank diameter - 1" neck diameter	41782

REBELLION™ XD CUSHION HITCHES

45959

19274

45960

45940

45952

45953

Part #	Description	Fits
45959	Accessory mount pins, qty 2	45951, 45955
45960	Accessory mount clip, qty1	45951, 45955
19274	Anti-rattle bumper with screw, qty 1	45951, 45955
45940	Tongue mount, qty 1	45951, 45955
45952	Dual-ball, qty 1 (chrome) - 2" ball = 10,000 lbs. - 2-5/16" ball = 15,000 lbs.	45951
45953	Dual-ball, qty 1 (yellow) - 2" ball = 10,000 lbs. - 2-5/16" ball = 20,000 lbs.	45955

ADJUSTABLE CHANNEL MOUNTS

19275

45921

45925

45916

45919
45920
45922

45912
45923

45924

Part #	Description	Fits
45910	2" channel shank, qty 1	45900, 45904, 45907
45911	2" channel shank, qty 1	45901
45917	2-5/16" channel shank, qty 1	45902, 45908
45912	Dual-ball, qty 1	45900, 45926
45923	Dual-ball, qty 1	45902, 45927
45924	Dual-ball, hook and step, qty 1	45904
45919	Ball and pintle hitch, qty 1 - 10,000 lbs. GTW - 2" ball	All channel mounts
45920	Ball and pintle hitch, qty 1 - 13,000 lbs. GTW - 2-5/16" ball	45907
45922	Ball and pintle hitch, qty 1 - 20,000 lbs. GTW - 2-5/16" ball	45908
45916	Shank anti-rattle screw, qty 1	Previous models
45921	Shank anti-rattle bumper, qty 1	Previous models
19275	Attachment anti-rattle	All channel mounts
45925	Channel pins & clips, qty 2	All channel mounts

ADJUSTABLE MULTI-BALL MOUNTS

45802

45800

45008

45059

Part #	Description	Fits
45059	Adjustable shank, qty 1	45799, 45008
45800	Tri-ball head, qty 1	45799
45802	Receiver tube mount, qty 1	45799
45008	Dual-ball clevis head, qty 1	45049

PINTLE MOUNTS, HOOKS & HITCHES

48549

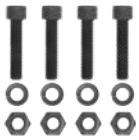
48334

48332

48551

48420

48430

48810

48820

48830

Bulk #	Description	Fits
48549	SecureLatch pintle mount hardware: - 1/2" x 2" carriage bolts, qty 4 - 1/2" top lock nuts, qty 4 - Bolt plates, qty 2	48011, 48016
48334	Pintle hook & hitch hardware: - 1/2" socket head cap screws, qty 4 - 1/2" hex nuts, qty 4 - 1/2" lock washers, qty 4	48410, 48411, 48505, All forged pintles (excl. 48231)
48332	Forged pintle hook & hitch hardware: - 5/8" socket head cap screws, qty 4 - 5/8" hex nuts, qty 4 - 5/8" lock washers, qty 4	48231
48551	Safety chain hangers, qty 2	All
48420	2" ball (10,000 lbs.), qty 1	48407, 48411
48430	2-5/16" ball (14,000 lbs.), qty 1	48406, 48410
48810	1-7/8" ball (6,000 lbs.), qty 1	48180
48820	2" ball (10,000 lbs.), qty 1	48007, 48190
48830	2-5/16" ball (16,000 lbs.), qty 1	48006, 48200

TOWING ELECTRICAL

FEATURED PRODUCTS

Scan QR code for current applications or visit curtmfg.com

NEXT Series brake controls

Powerful, compact and user-friendly, our redesigned controllers feature a sleek and modern design and low-profile bracket.

Echo® mobile

Echo's compact, portable design allows for intuitive, app-enabled functionality and easy transfer from one vehicle to another.

USCAR / 4-way socket

This OEM replacement features an easy plug-and-play design, using an existing USCAR socket. It offers a dual output of 4- and 7-way.

PRODUCT INDEX

137 Brake Controllers

143 Brake Controller Harnesses

146 Breakaway Kits

148 Taillight Converters

150 Custom Wiring

153 USCAR Products

156 Wiring Harness Extensions

161 RV Harnesses

162 Electrical Adapters

167 Plugs, Sockets & Brackets

174 Towing Lights

175 Accessories & Testers

TOWING ELECTRICAL SUBCATEGORY COLOR GUIDE

CURT has identified seven subcategories within the Towing Electrical category to make it easier for retail consumers to find the correct products. Each subcategory is given a unique color that we apply in our literature and retail packaging for easy visibility.

BRAKE CONTROLLERS	CUSTOM WIRING	RV HARNESSES	ELECTRICAL CONVERTERS	PLUGS & SOCKETS	ELECTRICAL ADAPTERS	ACCESSORIES & TESTERS

ELECTRICAL CONNECTOR WIRING GUIDE

Scan to learn more

- Rear views of plugs & sockets shown in the representative illustrations below
- Colors illustrated may not correspond with wiring found on the tow vehicle or trailer

7-way RV blade traditional configuration

Vehicle side

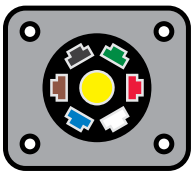

Trailer side

Function	Color
+12 volt	Black
Electric brakes	Blue
Reverse lights	Yellow
Left turn / brakes	Red
Right turn / brakes	Brown
Taillights	Green
Ground	White

6-way round

Vehicle side

Trailer side

Function	Color
+12 volt	Black
Electric brakes	Blue
Left turn / brakes	Yellow
Right turn / brakes	Green
Taillights	Brown
Ground	White

4-way flat

Vehicle side

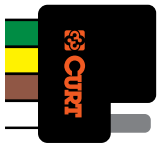

Trailer side

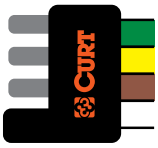

Function	Color
Left turn / brakes	Yellow
Right turn / brakes	Green
Taillights	Brown
Ground	White

WIRING SYSTEMS

Two-wire system

The two-wire system is the simplest form of vehicle and trailer wiring and is still used by some vehicles today. This system sends the stop and turn signals along one wire, and the taillight signal along a second wire.

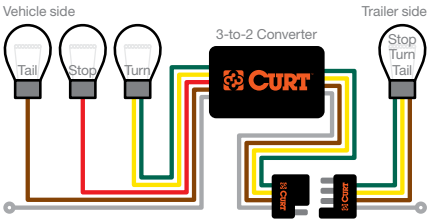

Three-wire system

Three-wire system

The three-wire system is the most common in the automotive industry. It sends the stop, taillight and turn signals along three separate wires. Vehicles with this system usually require a converter.

PWM system

More and more vehicles today use a PWM (pulse width modulation) system. Sometimes called a 'multiplex', this type of wiring is able to control multiple lighting functions through a single wire by varying the signal intensity. PWM systems can use incandescent or LED lights. There are generally two types: ST systems and STT systems.

BRAKE CONTROLLERS

BRAKE CONTROLLERS

For a full list of benefits see pages 138 - 141

- Easily calibrated for all towing needs
- Compatible with anti-lock brakes and cruise control
- Quick plug equipped for fast, easy installation
- Compatible with electric over hydraulic couplers
- Informative, full-color retail packaging

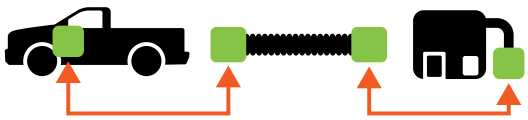

51200

Echo® in-line
Hidden under vehicle
Bluetooth-enabled
Smartphone-ready

51190

Echo® under-dash
Hidden under dash
Bluetooth-enabled
Smartphone-ready

51180

Echo® mobile
Portable design
Bluetooth-enabled
Smartphone-ready

51170

Spectrum™
Integrated OE look
Hidden main body
Tri-color LED display

51160

Assure™
Full text readout
Tri-axis sensitivity
Adjustable screen

NEW

51146

TriFlex™ NEXT
Tri-axis sensitivity
Auto adjustment
Digital display

NEW

51126

Discovery™ NEXT
Time-delay
Adjustable output
Digital display

NEW

51116

Venturer™ NEXT
Time-delay
Adjustable output
Ramp-up LED display

Dynamic power adjustment

Applies to Echo Series, Spectrum, Assure and TriFlex

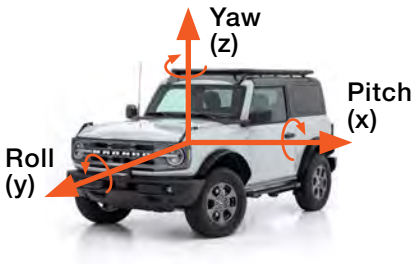

4.0 ▸ 3.2 Automatic power reduction for incline

4.0 ▸ 5.3 Automatic power increase for decline

Tri-axis circuit detects inertia on three planes for greater sensitivity over dual-axis models

Note: Values represented are for illustration only. The actual preset and adaptive values may differ from those shown here.

Name	Pkg #	Axles	Brakes	Activation Method	Display	Mount Angle	Sleep Mode	Electric Over Hydraulic	Warranty
Echo in-line	51200	1 - 4	2 - 8	Proportional	Phone app	Any	Yes	Yes	Ltd lifetime
Echo under-dash	51190	1 - 4	2 - 8	Proportional	Phone app	Any	Yes	Yes	Ltd lifetime
Echo mobile	51180	1 - 2	2 - 4	Proportional	Phone app	Any	N/A	Yes	Ltd lifetime
Spectrum	51170	1 - 4	2 - 8	Proportional	Tri-color LED	Any	N/A	Yes	Ltd lifetime
Assure	51160	1 - 4	2 - 8	Proportional	OLED screen	-20° to +70°	Yes	Yes	Ltd lifetime
TriFlex NEXT	51146 N	1 - 4	2 - 8	Proportional	LED digital	Any	Yes	Yes	Ltd lifetime
Discovery NEXT	51126 N	1 - 4	2 - 8	Time-delay	LED digital	Any	Yes	Yes	Ltd lifetime
Venturer NEXT	51116 N	1 - 3	2 - 6	Time-delay	LED digital	Any	Yes	Yes	Ltd lifetime

CONTROL ALL BRAKE SETTINGS FROM YOUR SMARTPHONE

BRAKE CONTROLLERS

ECHO® SERIES BRAKE CONTROLLERS

For master and inner pack quantities see page 341

Powered by a bluetooth-enabled system and customizable app, Echo® provides the most advanced braking experience on the market. This unique controller utilizes your smartphone to control and monitor all trailer brake activity with no need for extra modules, controls, buttons or knobs.

Three Ways To Install Echo®

Echo® mobile

Zero-tool, plug-and-play install between vehicle-trailer 7-way connectors

Echo® under-dash

Plug-and-play install inside the vehicle with vehicle-specific quick plug harness (sold separately)

Echo® in-line

Plugs in behind existing 7-way socket outside the vehicle with USCAR connectors

Product Details

- Bluetooth connection to control all brake settings from your smartphone
- Custom-designed mobile app monitors brake activity and sends status updates
- Triple-axis, motion-sensing accelerometer for highly responsive, smooth stops
- Multi-color LED indicator for easy setup and troubleshooting
- Automatic calibration reduces setup requirements
- Clear, in-app warning system for voltage recognition and no-brake situations
- Allows incoming calls to be received while app is running
- Built-in reverse-polarity and short-circuit protection
- Compatible with low-volt, PWM, ABS, cruise control and electric over hydraulic
- If Bluetooth connection is lost, the brake controller will continue to function safely, using the most recently programmed settings
- Not compatible, but will not interfere, with Apple CarPlay or Android Auto

OneControl Auto BY LIPPERT

Download the new OneControl® Auto app!

AUTO

Download on the App Store

Get it on Google Play

Product-Specific Features

Scan to learn more about Echo®

Echo® mobile

- Wireless, portable design allows for easy transfer from one vehicle to another
- Zero-tool, plug-and-play install between vehicle-trailer 7-way connectors
- Potted circuit board is sealed off from the elements for lasting durability
- Retention strap and locking tab help keep Echo® firmly installed into 7-way
- Stores multiple vehicle-trailer profiles
- Operates 2-4 trailer brakes at a time (1-2 axles)
- Replacement strap available (#51186)

51180

Echo® under-dash

- Simple installation using included adhesive or zip ties
- Plug-and-play install with vehicle-specific quick plug harness (sold separately, see page 143)
- Stores multiple trailer profiles
- Operates 2-8 trailer brakes at a time (1-4 axles)
- Sleep mode feature included to reduce power drain

51190

Echo® in-line

- Plugs in behind existing 7-way socket with USCAR connectors (24" USCAR extension harness included; other options available, see page 153)
- Waterproof enclosure seals and protects circuits against the elements
- Stores multiple trailer profiles
- Operates 2-8 trailer brakes at a time (1-4 axles)
- Sleep mode feature included to reduce power drain

51200

See page 153 for additional USCAR harnesses

BRAKE CONTROLLERS

ECHO® MANUAL OVERRIDE BUTTON

- Enables manual activation of trailer brakes
- Wireless accessory supports hands-free driving
- Compatible with all Echo® brake controllers and programmable for other Flic™ applications
  (Flic & Shortcut labs are trademarks of Shortcut Labs AB© 2020)
- Long-range Bluetooth maintains a strong connection
- Soft-touch material for comfortable use
- Replaceable battery with lifespan up to three years

51189 button
actual size (1-1/8")

Part #	Includes
51189	Double-sided adhesive pad for mounting

BRAKE CONTROLLERS

SPECTRUM™ BRAKE CONTROLLER

- Triple-axis, motion-sensing accelerometer for highly responsive, smooth stops
- Features two installation options: drill mount or surface adhesive mount
- User-selectable power output and trailer brake light activation
- Automatic leveling and calibration eliminate setup requirements
- Equipped with a quick plug for easy, plug-and-play installation
- Operates 2-8 trailer brakes at a time (1-4 axles)
- Built-in reverse-polarity and short-circuit protection
- Compatible with low-volt, PWM, ABS, cruise control and electric over hydraulic
- Tow vehicle 'low voltage' and trailer disconnect indicators

51170 interface actual size (1-7/8")

51170 all components

Controls manual override and all brake settings with a simple push-button rotary knob

Clean, dash-mounted, OEM-style user interface with 10 tri-color LEDs

Main module can be mounted out of sight to maintain a consistent, original equipment look

BRAKE CONTROLLERS

ASSURE™ BRAKE CONTROLLER

- Triple-axis, motion-sensing accelerometer for highly responsive, smooth stops
- User-selectable power output and trailer brake light activation
- Nine levels of sensitivity adjustment for varying loads or conditions
- Auto sleep mode prevents battery drain
- Built-in reverse-polarity and short-circuit protection
- Compatible with low-volt, PWM, ABS, cruise control and electric over hydraulic

51160

Features a large, high-quality, 1-1/2" wide, pivoting screen that displays trailer brake operation with full-text, easy-to-read messages

Pressure-sensitive manual override and tactile buttons allow application of the precise amount of brake power needed

Sleek, compact, low-profile design to be unobtrusive on the vehicle's dash. Plug-and-play design uses a CURT quick plug harness

NEXT SERIES BRAKE CONTROLLERS

NEW

Product Details

- Slim, low-profile design for a functional, modern aesthetic
- Unique bracket system for improved dash clearance
- 10 gain settings and 9 load settings to adapt to various driving conditions
- Auto-sleep mode prevents battery drain after five minutes of idle time
- Compatible with low-volt, PWM, ABS, cruise control and electric over hydraulic
- Plug-and-play install with vehicle-specific quick plug harness (sold separately)

Quick release, slim bracket

Extra-slim mounting bracket reduces mounting height by 1/2" and features quick release tabs for easy installation and removal

Push button controls

Push-button operation allows for quick, easy adjustment compared to old-style switches and dial-operation

Full-text diagnostics

TriFlex and Discovery only

Clean, user-friendly interface offers full-text readouts and troubleshooting capabilities, simplifying operation and maintenance

Product-Specific Features

NEW

51146

TriFlex™ NEXT

- Triple-axis accelerometer for highly responsive, smooth stops and dynamic power adjustments when going up or down a hill
- LED display shows power adjustments in 0.5 increments
- Clean, easy-to-read interface with full-text readouts
- Day-night mode and adjustable brightness for optimal visibility
- Auto leveling and calibration eliminate setup requirements
- Built-in reverse-polarity and short-circuit protection
- Tow vehicle 'low voltage' and trailer disconnect indicators

NEW

51126

Discovery™ NEXT

- Fully adjustable power and ramp time
- No internal moving parts and no leveling required
- LED display shows power adjustments in 0.5 increments
- Day-night mode and adjustable brightness for optimal visibility
- Full-text diagnostics for easier troubleshooting

NEW

51116

Venturer™ NEXT

- Fully adjustable power and ramp time
- No internal moving parts and no leveling required
- LED indicator lengthens as controller applies power
- Digital display shows power adjustments in 1.0 increments
- Adjustable brightness for optimal visibility

For master and inner pack quantities see page 341

BRAKE CONTROLLERS

COMPETITOR-TO-CURT ADAPTERS

- Allows CURT brake controllers and harnesses to be used with Tekonsha, Reese, Draw-Tite or Pro Series brake controllers and harnesses
(Brands are registered trademarks of First Brands Group™)

NEW

51532

51520

Pkg #	Connects
51520	CURT controllers to competitor harnesses
51532 N	Competitor controllers to CURT harnesses

BRAKE CONTROLLERS

QUICK PLUGS WITH 24" PIGTAILS

- For vehicles not equipped with factory tow package wiring
- Splices into a vehicle for a quick plug brake controller connection
- Compatible with applicable CURT brake controllers
- Reduces input voltage from vehicle for optimal brake controller function (#51531 only)
- Eliminates backfeed on brake light that can cause warnings in select vehicles (#51531 only)

NEW

51516 / 51531

51515 / 51531

Bulk #	Pkg #	Description
51515	51516	Quick plug with 24" pigtails
--	51531 N	

BRAKE CONTROLLERS

BRAKE CONTROLLER WIRING KITS

Adapter with brake controller wiring kit

- Adapts a 4-way flat vehicle socket to fit 7-way RV blade trailer plugs
- Includes wiring and components to splice in a brake controller connection

57186

Part #	Includes	Size	Qty
57186	Adapter (4-way to 7-way)	4-way flat to 7-way RV blade	1
	Cross-linked wire	10-gauge	25 feet
	Snap lock	12-10 gauge	1
	Flasher	--	1
	Circuit breaker	30-amp	1
	Circuit breaker	40-amp	1
	3/8" ring terminals	12-10 gauge	2
	#10 ring terminals	12-10 gauge	5
	Butt connectors	12-10 gauge	4
	Hex head screws	#10 - 3/4"	8
	Cable ties	8-1/2"	6

Universal brake controller wiring kit

- For tow vehicles not equipped with factory tow package wiring
- Compatible with 2, 4, 6 or 8-brake systems (1-4 axles)
- Designed for use with CURT quick plugs #51515 or #51516
- Brake controller and trailer connector not included

51500

Part #	Includes	Size	Qty
51500	Duplex wire	10-gauge	10 feet
	Cross-linked wire	10-gauge	20 feet
	Circuit breaker	30-amp	1
	3/8" ring terminals	12-10 gauge	2
	#10 ring terminals	12-10 gauge	2
	1/2" ring terminals	12-10 gauge	2
	Butt connectors	12-10 gauge	3
	Cable ties	8-1/2"	8

N = NEW PRODUCT

BRAKE CONTROLLERS

BRAKE CONTROLLER HARNESS APPLICATIONS

51446

- Quick plug harness installs in less than ten minutes
- Connects a CURT brake controller to specific vehicle applications
- Includes 24" of wire for flexible installation
- Slit-loom keeps wires contained and protected

Scan for current applications or visit curtmfg.com

Brake controller harness locations

BH1 - Under dash, left of steering column, near emergency brake pedal
BH2 - Under dash, near center console
BH3 - Under dash, in junction box left of steering column
BH4 - Behind storage pocket, above ashtray
BH5 - Under dash, behind center access panel on passenger side
BH6 - Under dash, near brake pedal
BH7 - Behind storage pocket in center of dash
BH8 - Under dash, to right of emergency brake pedal

Scan to learn how to install

Make / Model (Style)	Years	Bulk #	Pkg #	Loc.
Acura				
MDX	18 - 22	51392	51393	BH1
	14 - 17	--	51523*	BH1
Audi				
Q5	09 - 22	--	51522	BH2
Q7	07 - 22	--	51522	BH2
SQ5	14 - 17	--	51522	BH2
Buick				
Enclave	08 - 17	51422	51423	BH1
Cadillac				
Escalade	21 - 23	--	51525	BH1
	14 - 20	51451	51452	BH3,BH1
	03 - 06	51352	51353	BH3
	02 - 02	51342	51343	BH3
Escalade ESV	14 - 20	51451	51452	BH3,BH1
	03 - 06	51352	51353	BH3
Escalade EXT	03 - 06	51352	51353	BH3
	02 - 02	51342	51343	BH3
Chevrolet				
Avalanche 1500	03 - 06	51352	51353	BH3
	02 - 02	51342	51343	BH3
Avalanche 2500	03 - 06	51352	51353	BH3
	02 - 02	51342	51343	BH3
Silverado 1500	19 - 24	--	51525	BH1
	14 - 18	51451	51452	BH3,BH1
	03 - 06	51352	51353	BH3
	99 - 02	51342	51343	BH3
Silverado 1500 Classic	07 - 07	51352	51353	BH3
Silverado 1500 HD	03 - 06	51352	51353	BH3
	01 - 02	51342	51343	BH3
Silverado 1500 HD Classic	07 - 07	51352	51353	BH3
Silverado 1500 LD	19 - 19	51451	51452	BH3,BH1
Silverado 1500 LTD	22 - 22	--	51525	BH1

Make / Model (Style)	Years	Bulk #	Pkg #	Loc.
Chevrolet (continued)				
Silverado 2500	03 - 04	51352	51353	BH3
	99 - 02	51342	51343	BH3
Silverado 2500 HD	20 - 24	--	51525	BH1
	14 - 19	51451	51452	BH3,BH1
	03 - 06	51352	51353	BH3
	01 - 02	51342	51343	BH3
Silverado 2500 HD Clas.	07 - 07	51352	51353	BH3
Silverado 3500	03 - 06	51352	51353	BH3
	01 - 02	51342	51343	BH3
Silverado 3500 Classic	07 - 07	51352	51353	BH3
Silverado 3500 HD	20 - 24	--	51525	BH1
	14 - 19	51451	51452	BH3,BH1
Suburban	21 - 23	--	51525	BH1
	15 - 20	51451	51452	BH3,BH1
Suburban 1500	14 - 14	51451	51452	BH3,BH1
	03 - 06	51352	51353	BH3
	00 - 02	51342	51343	BH3
Suburban 2500	03 - 06	51352	51353	BH3
	00 - 02	51342	51343	BH3
Suburban 3500 HD	16 - 19	51451	51452	BH3,BH1
Tahoe	21 - 23	--	51525	BH1
	15 - 20	51451	51452	BH3,BH1
	03 - 06	51352	51353	BH3
	00 - 02	51342	51343	BH3
Traverse	09 - 17	51422	51423	BH1
Chrysler				
Aspen	07 - 09	51332	51333	BH1
Pacifica	17 - 22	51446[2]	51447[2]	BH8
Voyager	20 - 22	51446[2]	51447[2]	BH8

[1] Excluding factory integrated brake control - ITBC (Ram trucks)
[2] With factory tow package
Scan the QR code on page 143 for installation location diagram
Applications continued on the following page

BRAKE CONTROLLER HARNESS APPLICATIONS

Make / Model (Style)	Years	Bulk #	Pkg #	Loc.
Dodge				
Dakota	97 - 10	51332	51333	BH1
Durango	11 - 23	51446[2]	51447[2]	BH8
	98 - 09	51332	51333	BH1
Ram 1500	10 - 10	51438	51439	BH8
	95 - 09	51332	51333	BH1
Ram 2500 / 3500	10 - 10	51438	51439	BH8
	95 - 09	51332	51333	BH1
Ford				
Bronco	21 - 23	51436[2]	51437[2]	BH7
	94 - 96	51322	51323	BH2, BH1
	92 - 93	51312	51313	BH1
E-150	09 - 14	51432	51433	BH5
	03 - 08	51322	51323	BH2, BH1
E-150 Club Wagon	03 - 05	51322	51323	BH2, BH1
E-150 Econoline	92 - 02	51322	51323	BH2, BH1
E-150 Econoline Club Wag.	92 - 02	51322	51323	BH2, BH1
E-250	09 - 14	51432	51433	BH5
E-250 Econoline	92 - 02	51322	51323	BH2, BH1
E-350 Econoline	92 - 98	51322	51323	BH2, BH1
E-350 Econo. Club Wagon	92 - 02	51322	51323	BH2, BH1
E-350 Super Duty	09 - 14	51432	51433	BH5
E-450 Econo. Super Duty	00 - 02	51322	51323	BH2, BH1
E-450 Super Duty	09 - 14	51432	51433	BH5
Excursion	00 - 05	51322	51323	BH2, BH1
Expedition	18 - 20	--	51524	BH4
	15 - 17	51436	51437	BH7
	13 - 14	51432	51433	BH5
	97 - 12	51322	51323	BH2, BH1
Explorer	02 - 20	51322	51323	BH2, BH1
F-150	09 - 23	51436	51437	BH7
	94 - 08	51322	51323	BH2, BH1
	92 - 93	51312	51313	BH1
F-150 Heritage	04 - 04	51322	51323	BH2, BH1
F-150 Lightning	22 - 23	51436	51437	BH7
F-250	94 - 97	51322	51323	BH2, BH1
F-250 HD	97 - 97	51322	51323	BH2, BH1
F-250 / F-350 Super Duty	17 - 23	51436	51437	BH7
	08 - 16	51432	51433	BH5
	05 - 07	51372	51373	BH4
	99 - 04	51322	51323	BH2, BH1
F-350	94 - 96	51322	51323	BH2, BH1
F-450 Super Duty	17 - 23	51436	51437	BH7
	08 - 16	51432	51433	BH5
	05 - 07	51372	51373	BH4
F-550 Super Duty	17 - 22	51436	51437	BH7
	11 - 16	51432	51433	BH5
	06 - 06	51372	51373	BH4
Flex	12 - 20	51436	51437	BH7
	09 - 11	51322	51323	BH2, BH1

Make / Model (Style)	Years	Bulk #	Pkg #	Loc.
Ford (continued)				
Police Interceptor Utility	13 - 18	51322	51323	BH2, BH1
Windstar	95 - 03	51322	51323	BH2, BH1
GMC				
Acadia	07 - 18	51422	51423	BH1
Acadia Limited	17 - 17	51422	51423	BH1
Sierra 1500	19 - 24	--	51525	BH1
	14 - 18	51451	51452	BH3, BH1
	03 - 06	51352	51353	BH3
	99 - 02	51342	51343	BH3
Sierra 1500 Classic	07 - 07	51352	51353	BH3
Sierra 1500 HD	03 - 06	51352	51353	BH3
	01 - 02	51342	51343	BH3
Sierra 1500 HD Classic	07 - 07	51352	51353	BH3
Sierra 1500 Limited	22 - 22	--	51525	BH1
	19 - 19	51451	51452	BH3, BH1
Sierra 2500	03 - 04	51352	51353	BH3
	99 - 02	51342	51343	BH3
Sierra 2500 HD	20 - 24	--	51525	BH1
	14 - 19	51451	51452	BH3, BH1
	03 - 06	51352	51353	BH3
	01 - 02	51342	51343	BH3
Sierra 2500 HD Classic	07 - 07	51352	51353	BH3
Sierra 3500	03 - 06	51352	51353	BH3
	01 - 02	51342	51343	BH3
Sierra 3500 Classic	07 - 07	51352	51353	BH3
Sierra 3500 HD	20 - 24	--	51525	BH1
	14 - 19	51451	51452	BH3, BH1
Yukon	21 - 23	--	51525	BH1
	15 - 20	51451	51452	BH3, BH1
	03 - 06	51352	51353	BH3
	00 - 02	51342	51343	BH3
Yukon XL	21 - 23	--	51525	BH1
	15 - 20	51451	51452	BH3, BH1
Yukon XL 1500 / 2500	03 - 06	51352	51353	BH3
	00 - 02	51342	51343	BH3
Honda				
Passport	19 - 23	51392	51393	BH1
Pilot	09 - 24	51392	51393	BH1
Ridgeline	06 - 23	51392	51393	BH1
Hummer				
H2	03 - 07	51352	51353	BH3
Hyundai				
Palisade	21 - 22	--	51529	BH1
Santa Cruz	22 - 23	--	51529	BH1

[1] Excluding factory integrated brake control - ITBC (Ram trucks)
[2] With factory tow package
Scan the QR code on page 143 for installation location diagram
Applications continued on the following page

BRAKE CONTROLLERS

BRAKE CONTROLLER HARNESS APPLICATIONS

Make / Model (Style)	Years	Bulk #	Pkg #	Loc.
Infiniti				
QX56	04 - 13	51382	51383	BH1
QX60	14 - 18	51382	51383	BH1
QX80	14 - 20	51382	51383	BH1
Jeep				
Cherokee	14 - 22	51459	51460	BH1
Gladiator	20 - 23	51527	51526	BH1
Grand Cherokee	11 - 23	51446[2]	51447[2]	BH8
Grand Cherokee L	21 - 23	51446	51447	BH8
Grand Cherokee WK	22 - 22	51446	51447	BH8
Wrangler JL, Unlimited	18 - 24	51527	51526	BH1
Kia				
Telluride	21 - 22	--	51529	BH1
Land Rover				
LR3	05 - 09	51322	51323	BH2, BH1
LR4	10 - 15	51322	51323	BH2, BH1
Range Rover	05 - 15	51322	51323	BH2, BH1
Range Rover Evoque	12 - 17	51322	51323	BH2, BH1
Range Rover Sport	06 - 15	51322	51323	BH2, BH1
Lexus				
GX460	10 - 15	51362	51363	BH1
GX470	03 - 09	51362	51363	BH1
LX470	03 - 07	51362	51363	BH1
LX570	08 - 15	51362	51363	BH1
Lincoln				
Mark LT	06 - 08	51322	51323	BH2, BH1
MKT	12 - 19	51436	51437	BH7
	10 - 11	51322	51323	BH2, BH1
Navigator	15 - 20	51436	51437	BH7
	13 - 14	51432	51433	BH5
	98 - 12	51322	51323	BH2, BH1
Mazda				
CX-50	23 - 24	--	51530	BH2
CX-90	24 - 24	--	51530	BH2
Mercury				
Mountaineer	02 - 10	51322	51323	BH2, BH1

Make / Model (Style)	Years	Bulk #	Pkg #	Loc.
Nissan				
Armada	05 - 23	51382	51383	BH1
Frontier	05 - 23	51382	51383	BH1
NV1500 / 2500 / 3500	12 - 21	51382	51383	BH1
NV200	13 - 21	51382	51383	BH1
Pathfinder	05 - 23	51382	51383	BH1
Pathfinder Armada	04 - 04	51382	51383	BH1
Titan	04 - 23	51382	51383	BH1
Titan XD	16 - 23	51382	51383	BH1
Xterra	05 - 15	51382	51383	BH1
Ram				
1500	15 - 23	51457[1]	51458[1]	BH2
	13 - 14	--	51453	BH8
	11 - 12	51438	51439	BH8
1500 Classic	19 - 23	51457[1]	51458[1]	BH2
2500 / 3500	15 - 23	51457[1]	51458[1]	BH2
	13 - 14	--	51453	BH8
	11 - 12	51438	51439	BH8
4500 / 5500	16 - 23	51457[1]	51458[1]	BH2
Saturn				
Outlook	07 - 09	51422	51423	BH1
Toyota				
4Runner	03 - 22	51362	51363	BH1
Land Cruiser	03 - 21	51362	51363	BH1
Sequoia	03 - 20	51362	51363	BH1
Tacoma	16 - 22	51455	51456	BH4
	07 - 15	51362	51363	BH1
Tundra	15 - 18	51455	51456	BH4
	03 - 14	51362	51363	BH1
Volkswagen				
Atlas	21 - 24	--	51528[2]	BH9
	18 - 20	--	51522[2]	BH2
Atlas Cross Sport	20 - 24	--	51528[2]	BH9
ID.4	21 - 22	--	51528[2]	BH9
Touareg	04 - 17	--	51522	BH2

[1] Excluding factory integrated brake control - ITBC (Ram trucks)
[2] With factory tow package
Scan the QR code on page 143 for installation location diagram

BRAKE CONTROLLERS

BRAKE CONTROLLER REPLACEMENT PARTS

Part #	Description	Fits
19297	Mounting bracket and hardware	51146, 51126, 51116
51186	Security strap	51180
19301	Knob	51170

Part #	Description	Fits
51144	Mounting bracket and hardware	51140
51124	Mounting bracket and hardware	51120
51114	Mounting bracket and hardware	51110

BRAKE CONTROLLERS

BREAKAWAY KITS

Check to ensure battery is charged before towing

- Activates electric trailer brakes in the event of a breakaway
- Meets DOT requirements for holding / breakaway situations
- Compatible on trailers with up to three axles
- LED lights indicate a good charge, battery charging or low battery (#52042, #52044)
- Bolt-on mounting system for secure installation on the trailer
- Required in most states

52044

52042

52040

52028

Part #	Loads From	Includes	Replacement Part #
Push-to-Test Breakaway Kits			
52044	Top	Push-to-test, lockable battery case	--
		12-volt 5-amp rechargeable battery	52023
		Built-in battery charger	--
		Nylon breakaway switch	52010
		Mounting hardware	--
52042	Side	Includes the same parts as 52044	--
Soft-Trac 1 Breakaway Kits			
52040	Side	Lockable battery case	--
		12-volt 5-amp rechargeable battery	52023
		Nylon breakaway switch	52010
		Battery charger	52025
		Mounting hardware	--
52041	Side	Includes the same parts as 52040 Battery charger not included	--
Soft-Trac 2 Breakaway Kits			
52028	Top	Lockable battery case with bracket	52029
		12-volt 5-amp rechargeable battery	52023
		Nylon breakaway switch	52010
		Battery charger	52025
52026	Top	Includes the same parts as 52028 Battery charger not included	--

BE READY FOR ANYTHING WITH A CURT BREAKAWAY

BRAKE CONTROLLERS

BREAKAWAY KIT & BATTERY CASE REPLACEMENT PARTS

- For use with trailer breakaway systems
- Connects tow vehicle to trailer breakaway battery (#52010, #52011)
- Features a high-temp metal mounting tab and nylon pull-pin (#52020)
- Protects battery and charger from the elements and corrosion
- Constructed from durable polyethylene plastic

52025

52020 52021

52010 52011

52023

52022

52090

52029

52027

52030

Bulk #	Pkg #	Width	Height	Depth	Description	Loads From	Includes
Breakaway Replacement Parts							
52010	52011	--	--	--	Breakaway switch with 10' leads	--	Nylon case with weldable high-temp, metal tab and silver contact points
52020	52021	--	--	--	48" lanyard	--	--
52023	--	3-1/2"	4"	2-3/4"	Sealed lead acid battery for 1-3 axle trailers (12-volt, 5 amps per hour)	--	--
52025	--	--	--	--	12-volt battery charger plug	--	--
Replacement Battery Cases							
52029	--	5"	3-1/4"	3-7/8"	3-1/8" inside bracket depth	Top	Weldable metal bracket for easy mounting on A-frame or jack posts
52030	--	5"	3-1/4"	3-7/8"	--	Side	--
52027	--	5"	3-3/8"	3-3/4"	Watertight case with rubber gaskets and screw-tight lid	Top	Four-screw lid
52022	--	6"	5-1/2"	3-1/4"	--	Top	Lockable tab and a bolt-on mount
52090	--	5-7/8"	5-3/8"	3-1/2"	--	Top	Metal bracket / locking bar for security

On vehicles with two-wire electrical systems that require a powered converter, the converter's red wire is not used as a stoplight connection and needs to be grounded.

ELECTRICAL CONVERTERS

TAILLIGHT CONVERTERS

ESD - Electrostatic Discharge
PWM - Pulse-Width Modulation
SMT - Surface Mount Technology

For vehicles that are not compatible with CURT custom wiring options, a taillight converter provides a reliable alternative. CURT taillight converters splice into the vehicle's wiring system and provide a standard 4-way flat trailer connector. **Use the application guide on page 28 to find the right wiring solution for your customer.**

ELECTRICAL CONVERTERS

3-TO-2-WIRE TAILLIGHT CONVERTERS

For taillight converter applications go to page 28

- Potted enclosure increases water and vibration resistance for mounting on vehicle exterior (#56496 / #59496)
- Provides improved overvolt, ESD and short-circuit protection (#56496 / #59496)
- No heavy-duty flasher required
- Four snap locks included for fast, secure splicing (excluding #58240)
- Kits contain 10-amp powered converter wiring kit #55151

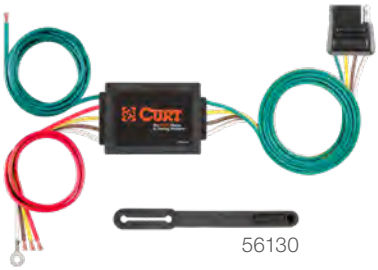

56130

59496

Kit #	Pkg #	Bulk #	30-Pack#	Powered	Circuit-Protected	Signal Circuit	Taillight Circuit	SMT
59496	56496	--	56497*	Yes	Yes	3.0 amps	6.0 amps	Yes
55179*	55178*	55177*	--	--	--	2.1 amps	5.0 amps	No
--	56130	--	--	--	--	3.0 amps	5.0 amps	Yes
--	56175	--	--	--	Yes	3.0 amps	5.0 amps	Yes
59187	56187	--	--	Yes	--	3.0 amps	5.0 amps	Yes
59190	56190	--	--	Yes	Yes	7.5 amps	7.5 amps	Yes
--	--	58240[1]	--	--	--	2.1 amps	5.0 amps	Yes

[1] Comes with blunt-cut wires instead of 4-way flat output
* Continued while supplies last

ELECTRICAL CONVERTERS

MULTI-FUNCTION TAILLIGHT CONVERTER

- Converts 2-wire, 3-wire or PWM systems to 2-wire trailer light wiring
- Potted enclosure significantly increases resistance to water and vibration
- Constructed with SMT circuitry for better performance and durability
- Microcontroller senses current to rapidly react to overload
- Provides improved overload, short-circuit and thermal protection
- Low-voltage operation allows function down to seven volts
- Four snap locks included for fast, secure splicing
- #59236 contains 15-amp powered converter wiring kit #55152

56236

Kit #	Pkg #	Powered	Circuit- Protected	Signal Circuit	Taillight Circuit
59236	56236	Yes	Yes	5.0 amps	7.5 amps

ELECTRICAL CONVERTERS

LOW-SIDE SWITCHING TAILLIGHT CONVERTER

- SMT circuitry for better performance and durability
- Snap locks included for fast, secure splicing
- No heavy-duty flasher required

Part #	Powered	Signal Circuit	Taillight Circuit
56195	Yes	2.1 amps	4.2 amps

56195

ELECTRICAL CONVERTERS

2-TO-3-WIRE TAILLIGHT CONVERTER

- Used for dinghy towing
- Constructed with SMT circuitry for better performance and durability
- No heavy-duty flasher or direct battery connection required
- Not compatible with LED trailer lighting systems

Part #	Powered	Signal Circuit	Taillight Circuit
56196	No	2.1 amps	5.0 amps

56196

ELECTRICAL CONVERTERS

24-VOLT TAILLIGHT CONVERTER

- Primarily used for 24V automotive systems, buses, trucks and cab and chassis wiring
- 3-wire to 2-wire converter compatible with incandescent and LED trailer lighting systems
- No heavy-duty flasher or direct battery connection required
- Does not reduce output to 12 volts

Part #	Powered	Signal Circuit	Taillight Circuit	Wire Length	Wire Size
56424	No	2.1 amps	7.5 amps	26"	16-gauge

56424

ELECTRICAL CONVERTERS

POWERED TAILLIGHT CONVERTER WIRING KITS

- Routes power from vehicle battery to powered converter

55151

55152

Part #	Includes	Size	Qty
55151 (10-amps)	Cross-linked wire	12-gauge	20 feet
	In-line fuse holder	10-amp (red)	1
	ATC fuse	10-amp (red)	1
	3/8" ring terminal	12-10 gauge	1
	Butt connector	12-10 gauge	2
	Hex head screw	#8 - 1/2"	1
	Cable tie	14-1/2"	1
	Cable ties	6"	8

Part #	Includes	Size	Qty
55152* (15-amps)	Cross-linked wire	12-gauge	20 feet
	In-line fuse holder	15-amp (yellow)	1
*Use with #56236 (page 148)	ATC fuse	15-amp (blue)	1
	3/8" ring terminal	12-10 gauge	1
	Butt connector	12-10 gauge	2
	Hex head screw	#8 - 1/2"	1
	Cable tie	14-1/2"	1
	Cable ties	6"	8

CUSTOM WIRING

CUSTOM WIRING & T-CONNECTORS

For custom wiring applications go to page 28

Custom wiring is the easiest way to equip a vehicle with a trailer wiring connection. There are two types: harnesses and connectors. Both are made vehicle-specific and install with no cutting or splicing.

- Provides a standard 4-way flat connector on the vehicle for plugging in trailer wiring
- Simple plug-and-play design eliminates the need for cutting or splicing
- Equipped with a taillight converter if needed
- Dust cover included to keep 4-way flat clean when not in use

Harnesses

Custom wiring harnesses use multiple plugs to 'T' into the taillight assembly

Connectors

Custom wiring connectors use a single plug to plug into a specific OEM socket

CUSTOM WIRING

DODGE FACTORY HARNESS ADAPTER

- Adapts Dodge harness applications to fit USCAR replacement plugs (pictured right)
- Simple plug-and-play design eliminates the need for cutting or splicing
- Slit loom keeps wires contained and well protected

Provides this USCAR socket

57300

Make / Model	Years
Chrysler	
Aspen	07 - 08
Dodge	
Dakota	00 - 09
Durango	01 - 08
Ram 1500	00 - 08
Ram 1500 Van	01 - 03
Ram 2500	00 - 09
Ram 2500 Van	01 - 03

Make / Model	Years
Dodge (continued)	
Ram 3500	00 - 09
Ram 3500 Van	01 - 03
Sprinter 2500	03 - 09
Sprinter 3500	03 - 09
Freightliner	
Sprinter 2500	03 - 09
Sprinter 3500	03 - 09

Make / Model	Years
Jeep	
Commander	06 - 10
Grand Cherokee	00 - 10
Liberty	05 - 08
Mitsubishi	
Raider	06 - 09

#57300 fits all applications listed above
Must be equipped with factory tow package

LIPPERT

CUSTOM WIRING

REPLACEMENT USCAR SOCKET

- Replaces damaged or missing USCAR vehicle harnesses
- Retrofits weatherproof USCAR-type 7-way to vehicles not equipped by using CURT part numbers 55415, 55515, 55664, 55774, 56514, 56515 or 57101

Part #	Length	Replaces	Provides
56229	24" wires	Existing vehicle harness connector	USCAR connector end

56229

Provides this USCAR socket

CUSTOM WIRING | ELECTRICAL ADAPTERS

DUAL-OUTPUT ADAPTERS WITH BACKUP ALARM

- Integrated backup alarm sounds when vehicle is in reverse (97 decibels)
- Provides 7-way RV blade and 4-flat sockets
- Dust covers included to keep connectors clean
- Bracket mounts wiring to the vehicle or trailer hitch

57101 USCAR plug

57102

57101

Pkg #	Fits	Plugs Into	Output
Custom Wiring			
57101	See USCAR replacement products on page 153	USCAR socket	7-way RV blade and 4-way flat
Adapter			
57102	Universal adapter	4-way flat, manual wiring needed	7-way RV blade and 4-way flat

CUSTOM WIRING

OEM DUAL-OUTPUT 7- & 4-WAY SOCKET

- Plugs into USCAR socket to provide 4- and 7-way trailer wiring connectors
- Fits USCAR-equipped vehicles with factory tow plugs only (see page 154 for applications)
- Easy, snap-in installation with simple plug-and-play design eliminates the need for cutting or splicing
- Rubber gasket to keep moisture and elements out
- Spring-loaded dust covers keep connectors clean
- Pre-greased terminals for a reliable connection

57015 57020

Plugs into this USCAR socket

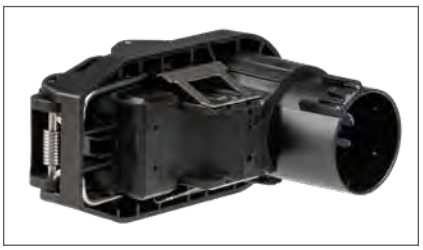

Fits USCAR-equipped vehicles with factory tow plugs only

Plugs into USCAR socket to provide 4- and 7-way trailer wiring connectors

Snap-in installation with simple plug-and-play design eliminates cutting or splicing

Bulk #	Pkg #	Fits	Plugs Into	Output
57015	57020	See USCAR application guide on page 154	USCAR socket	7-way RV blade and 4-way flat

CUSTOM WIRING

OEM DUAL-OUTPUT 7- & 4-WAY SOCKET BRACKET

- Securely mounts #57015 and #57020 USCAR connector to the vehicle or trailer hitch
- Includes self-tapping screws
- Constructed from high-strength steel

Part #	Fits	Finish
57016	57015 and 57020 USCAR sockets	A-coat with gloss black powder coat

57016

ELECTRICAL ADAPTERS

4-WAY FLAT TO USCAR

- Adapts 4-way flat vehicle socket to accept a USCAR connector
- Blunt-cut wires to add reverse lights, trailer brakes and auxiliary power
- Includes wire kit for connecting to vehicle battery
- Some manual wiring required

Part #	From Vehicle	To Trailer	Finish
56476	4-way flat	USCAR socket	Plastic

56476

CUSTOM WIRING

USCAR CUSTOM WIRING HARNESSES & CONNECTORS

For USCAR applications go to page 154

- Fits USCAR-equipped vehicles with factory tow plugs
- See page 173 for USCAR mounting bracket #58520

All plug into this USCAR socket

55774

57101

55664

55515

56515

55384

56584

57015 57020

55416

55415

56415

56475

Part #	Plugs Into	Provides	Output
55774	USCAR socket	Two output connections and mounting bracket	7-way RV blade and 4-way flat
57101	USCAR socket	Two output connections and backup alarm	7-way RV blade and 4-way flat
55664	USCAR socket	Two output connections and mounting bracket	6-way round and 4-way flat
55515	USCAR socket	Replacement end	4-way flat
56515	USCAR socket	Replacement end	5-way flat
55384	T's into USCAR socket	Additional connection	4-way flat
56584	T's into USCAR socket	Additional connection	5-way flat
57020	USCAR socket	Two output connections	7-way RV blade and 4-way flat
55416	USCAR socket	Heavy-duty replacement socket	7-way RV blade
55415	USCAR socket	Replacement socket	7-way RV blade
56415	USCAR socket	Replacement for twist-lock brackets	7-way RV blade
56475	USCAR socket	24" extension	USCAR socket

CUSTOM WIRING

USCAR CUSTOM WIRING HARNESSES & CONNECTORS APPLICATION GUIDE

- **To see USCAR products that fit the applications below, go to page 153**
- Fits USCAR-equipped vehicles with factory tow plugs
- See page 173 for USCAR mounting bracket #58520

All plug into this USCAR socket

Make / Model	Style	Years
Audi		
Q7	--	17 - 22
Buick		
Enclave	--	08 - 23
Rainier	--	04 - 07
Cadillac		
Escalade	--	02 - 22
Escalade ESV	--	03 - 22
Escalade EXT	--	02 - 13
XT5	--	17 - 23
XT6	--	20 - 23
Chevrolet		
Avalanche	--	07 - 13
Avalanche 1500	--	02 - 06
Avalanche 2500	--	02 - 06
Blazer	AWD	19 - 24
Colorado	--	04 - 23
Equinox	--	18 - 22
Express 1500	--	09 - 09
Express 2500	--	09 - 23
Express 3500	--	09 - 23
Express 4500	--	09 - 09
Silverado 1500	--	99 - 23
Silverado 1500 Classic	--	07 - 07
Silverado 1500 HD	--	01 - 06
Silverado 1500 HD Classic	--	07 - 07
Silverado 1500 LD	--	19 - 19
Silverado 1500 LTD	--	22 - 22
Silverado 2500	--	99 - 04
Silverado 2500 HD	--	01 - 23
Silverado 2500 HD Classic	--	07 - 07
Silverado 3500	--	01 - 06
Silverado 3500 Classic	--	07 - 07
Silverado 3500 HD	--	08 - 23
Suburban	--	15 - 23
Suburban 1500	--	00 - 14
Suburban 2500	--	00 - 13
Suburban 3500 HD	--	16 - 19
Tahoe	--	00 - 23
Trailblazer	--	02 - 09
Trailblazer EXT	--	02 - 06
Traverse	--	09 - 23

Make / Model	Style	Years
Chrysler		
Aspen	--	07 - 09
Pacifica	--	17 - 22
Voyager	--	20 - 22
Dodge		
Durango	With factory tow pkg	11 - 23
	--	07 - 09
Ram 1500	--	09 - 10
Ram 2500 / 3500	--	10 - 10
Ford		
E-150	--	03 - 10
E-150 Club Wagon	--	03 - 05
E-150 Econoline	--	97 - 02
E-150 Econoline Club Wagon	--	97 - 02
E-250	--	03 - 10
E-250 Econoline	--	97 - 02
E-350 Club Wagon	--	03 - 05
E-350 Econoline	--	97 - 98
E-350 Econoline Club Wagon	--	97 - 02
E-350 Super Duty	--	99 - 10
E-450 Econoline Super Duty	--	00 - 02
E-450 Super Duty	--	03 - 10
Excursion	--	00 - 05
Expedition	--	97 - 23
Explorer	--	00 - 23
Explorer Sport Trac	--	09 - 09
F-150	--	97 - 23
F-150 Heritage	--	04 - 04
F-250	--	97 - 99
F-250 HD	--	97 - 97
F-250 Super Duty	--	99 - 22
F-350 Super Duty	--	99 - 22
F-450 Super Duty	--	99 - 22
F-550 Super Duty	--	99 - 22
Flex	--	09 - 16
Police Interceptor Utility	--	18 - 18
Ranger	--	00 - 23
Transit-150	--	15 - 23
Transit-250	--	15 - 23
Transit-350	--	15 - 23
Transit-350 HD	--	15 - 23
Freightliner		
Sprinter 2500	With factory tow pkg	10 - 21
Sprinter 3500	With factory tow pkg	10 - 21

Make / Model	Style	Years
GMC		
Acadia	--	07 - 23
Acadia Limited	--	17 - 17
Canyon	--	04 - 23
Envoy	--	02 - 09
Envoy XL	--	02 - 06
Envoy XUV	--	04 - 05
Savana 1500	--	09 - 09
Savana 2500	--	09 - 23
Savana 3500	--	09 - 23
Savana 4500	--	09 - 09
Sierra 1500	--	99 - 23
Sierra 1500 Classic	--	07 - 07
Sierra 1500 HD	--	01 - 06
Sierra 1500 HD Classic	--	07 - 07
Sierra 1500 Limited	--	19 - 22
Sierra 2500	--	99 - 04
Sierra 2500 HD	--	01 - 23
Sierra 2500 HD Classic	--	07 - 07
Sierra 3500	--	01 - 06
Sierra 3500 Classic	--	07 - 07
Sierra 3500 HD	--	07 - 23
Terrain	--	18 - 23
Yukon	--	00 - 23
Yukon XL	--	15 - 23
Yukon XL 1500	--	00 - 14
Yukon XL 2500	--	00 - 13
Honda		
Passport	--	19 - 23
Pilot	--	09 - 23
Ridgeline	--	06 - 23
Hummer		
H2	--	03 - 09
H3	--	06 - 10
H3T	--	09 - 10
Infiniti		
JX35	--	13 - 13
QX56	--	04 - 13
QX60	--	14 - 23
QX80	--	14 - 22
Isuzu		
Ascender	--	03 - 08
Jeep		
Cherokee	--	14 - 23
Gladiator	--	20 - 23
Grand Cherokee	With factory tow pkg	19 - 23
	Built before May 2018	18 - 18
	--	11 - 17
Grand Cherokee WK	--	22 - 22
Wrangler	JL	18 - 24
	JK	07 - 18

Make / Model	Style	Years
Kia		
Borrego	--	09 - 11
Lincoln		
Aviator	--	03 - 05
Mark LT	--	06 - 08
Navigator	--	98 - 23
Mercedes-Benz		
Sprinter 2500	With factory tow pkg	10 - 23
Sprinter 3500	With factory tow pkg	10 - 23
Mercury		
Mountaineer	--	02 - 10
Nissan		
Armada	--	05 - 22
Frontier	--	05 - 23
Pathfinder	--	05 - 23
Pathfinder Armada	--	04 - 04
Titan	--	04 - 23
Titan XD	--	16 - 23
Oldsmobile		
Bravada	--	02 - 04
Ram		
1500	--	11 - 23
1500 Classic	--	19 - 23
2500	--	11 - 23
3500	--	11 - 23
4500	--	11 - 23
5500	--	11 - 23
ProMaster 1500	--	14 - 23
ProMaster 2500	--	14 - 23
ProMaster 3500	--	14 - 23
Saab		
9-7x	--	05 - 09
Saturn		
Outlook	--	07 - 10
Subaru		
Ascent	--	19 - 24
Toyota		
4Runner	--	15 - 23
Land Cruiser	--	18 - 22
Sequoia	--	12 - 23
Tacoma	--	07 - 23
Tundra	--	10 - 23
Volkswagen		
Atlas	With factory tow pkg	21 - 24
Atlas Cross Sport	With factory tow pkg	20 - 24

7' with GM cover plate

ROUTES SOCKET INTO REAR OF THE TRUCK BED

CUSTOM WIRING

CUSTOM WIRING HARNESS EXTENSIONS

For harness applications see adjacent page

- Routes a 7-way RV blade socket into truck bed while retaining use of rear socket
- Simple plug-and-play design eliminates the need for cutting or splicing
- Allows for easy connection of 5th wheel or gooseneck wiring
- 7' extension with right-angle plug for easy installation
- Spring-loaded dust cover keeps connector clean when not in use
- Slit loom keeps wires contained and well protected
- Requires 2-1/8" hole saw for installation

56071 (7') / 56001 (10')

56070 (7') / 56000 (10')

10' routes socket closer to truck cab

Right-angle plug for easy installation

#57015 4- and 7-way dual socket

LIPPERT

Make / Model	Style	Years	7' Pkg#	Includes #	7' Bulk 10-Pack#	10' Pkg#	Includes #	10' Bulk 10-Pack#
Chevrolet / GMC								
Silverado / Sierra 1500	--	19 - 23	56003	57015[3]	--	--	--	--
			56072	55417[2]	--	--	--	--
		99 - 18	56070	--	56070010	56000	--	56000010
Silverado / Sierra 1500 Classic	--	07 - 07	56070	--	56070010	56000	--	56000010
Silverado / Sierra 1500 HD	--	01 - 06	56070	--	56070010	56000	--	56000010
Silverado / Sierra 1500 HD Classic	--	07 - 07	56070	--	56070010	56000	--	56000010
Silverado 1500 LD	--	19 - 19	56070	--	56070010	56000	--	56000010
Silverado 1500 LTD	--	22 - 22	56003	57015[3]	--	--	--	--
			56072	55417[2]	--	--	--	--
Sierra 1500 Limited	--	22 - 22	56003	57015[3]	--	--	--	--
			56072	55417[2]	--	--	--	--
		19 - 19	56070	--	56070010	56000	--	56000010
Silverado / Sierra 2500	--	99 - 04	56070	--	56070010	56000	--	56000010
Silverado / Sierra 2500 HD	--	20 - 23	56003	57015[3]	--	--	--	--
			56072	55417[2]	--	--	--	--
		01 - 19	56070	--	56070010	56000	--	56000010
Silverado / Sierra 2500 HD Classic	--	07 - 07	56070	--	56070010	56000	--	56000010
Silverado / Sierra 3500	--	01 - 06	56070	--	56070010	56000	--	56000010
Silverado / Sierra 3500 Classic	--	07 - 07	56070	--	56070010	56000	--	56000010
Silverado / Sierra 3500 HD	--	20 - 23	56003	57015[3]	--	--	--	--
			56072	55417[2]	--	--	--	--
		07 - 19	56070	--	56070010	56000	--	56000010
Dodge								
Dakota	--	95 - 10	56071	--	--	56001	--	--
Ram 1500	--	09 - 10	56070	--	56070010	56000	--	56000010
		95 - 08	56071	--	--	56001	--	--
Ram 2500 / 3500	--	10 - 10	56070	--	56070010	56000	--	56000010
		95 - 09	56071	--	--	56001	--	--
Ford								
F-150	--	15 - 23	57008	57007[1]	--	57010	57007[1]	--
		97 - 14	56070	--	56070010	56000	--	56000010
F-150 Heritage	--	04 - 04	56070	--	56070010	56000	--	56000010
F-250	--	97 - 99	56070	--	56070010	56000	--	56000010
F-250 HD	--	97 - 97	56070	--	56070010	--	--	--
F-250 Super Duty	--	17 - 23	57008	57007[1]	--	57010	57007[1]	--
		99 - 16	56070	--	56070010	56000	--	56000010
F-350 / F-450 Super Duty	Excluding Cab & Chassis	17 - 23	57008	57007[1]	--	57010	57007[1]	--
		99 - 16	56070	--	56070010	56000	--	56000010
	Cab & Chassis with 34" frame	99 - 23	56070	--	56070010	56000	--	56000010
F-550 Super Duty	--	99 - 23	56070	--	56070010	56000	--	56000010
Nissan								
Titan	--	04 - 23	56070	--	56070010	56000	--	56000010
Titan XD	--	16 - 23	56070	--	56070010	56000	--	56000010
Ram								
1500 / 2500 / 3500	--	11 - 23	56070	--	56070010	56000	--	56000010
1500 Classic	--	19 - 23	56070	--	56070010	56000	--	56000010
Toyota								
Tundra	--	10 - 23	56070	--	56070010	56000	--	56000010

[1] 57007 isolator kit to prevent corrosion of aluminum bodies (see page 158)
[2] 55417 Chevrolet / GMC truck bed cover to provide a clean, factory look (see page 158)
[3] 57015 dual-output 7-way & 4-flat connector (see page 158)

CUSTOM WIRING HARNESS EXTENSION ISOLATOR KIT

- Neoprene well nuts isolate steel bolts from aluminum surfaces
- Securely mounts a 7-way RV blade extension harness in the truck bed
- Designed for specific Ford applications

Make / Model	Years	Part #
Ford		
F-150	15 - 23	57007
F-250 / F-350 Super Duty	17 - 23	57007

GM TRUCK BED 7-WAY OPENING COVER PLATE

- Covers gaps to provide a clean, factory look in the truck bed
- Easy, snap-in installation
- Slotted holes for adjustability
- Compatible with spray-in liners

55417

Part #	Adapts
55417	CURT 7-way sockets to fit 2020+ factory Chevrolet / GMC truck bed connector openings

OEM REPLACEMENT DUAL-OUTPUT 7- & 4-WAY CONNECTOR

- Plugs into USCAR socket to provide 4- and 7-way trailer wiring connectors
- Fits USCAR-equipped vehicles with factory tow plugs only (see page 154 for applications)
- Easy, snap-in installation with simple plug-and-play design eliminates the need for cutting or splicing
- Rubber gasket to keep moisture and elements out
- Spring-loaded dust covers keep connectors clean
- Pre-greased terminals for a reliable connection

57015

57020

Plugs into this USCAR socket

Bulk #	Pkg #	Fits	Plugs Into	Output
57015	57020	See USCAR application guide on page 154	USCAR socket	7-way RV blade and 4-way flat

PLUGS & SOCKETS

7-WAY RV BLADE EXTENSION

- Routes existing 7-way RV blade socket into full-size pickup truck bed
- Universal size fits any 7-way RV blade socket
- Allows for easy connection of 5th wheel or gooseneck wiring
- 7' extension length accommodates virtually any size truck bed
- Spring-loaded dust cover keeps connector clean when not in use

Part #	Length	Fits
56080	7'	7-way RV blade socket

56080

PLUGS & SOCKETS

7-WAY RV BLADE REPLACEMENT HARNESSES

- Replaces the trailer-end plug of any 7-way harness
- Interchangeable with other 7-way RV blade connectors
- Color-coded wires for easier splicing
- Wires protected by heavy-duty, weather-resistant cable

56601 56621

56602 56622

56603 56623

Bulk #	Pkg #	Length
56601	56621	6'
56602	56622	8'
56603	56623	10'

PLUGS & SOCKETS

COLD-WEATHER 7-WAY RV BLADE REPLACEMENT HARNESSES

- Replaces the trailer-end plug of any 7-way harness
- Soft thermoplastic elastomer casing to remain flexible in cold temperatures (temperature rating from -40˚F up to 221˚F)
- Interchangeable with other 7-way RV blade connectors
- Color-coded wires for easier splicing

56611

56612

56613

Bulk #	Length
56611	6'
56612	8'
56613	10'

STOP DAMAGE BEFORE IT HAPPENS

CUSTOM WIRING

PROTECTIVE MULTIPRO™ / MULTI-FLEX™ TAILGATE SENSORS

- Prevents deployment of inner tailgate panel when ball mount is installed
- Helps avoid costly tailgate damage
- Compatible with GMC MultiPro™ and Chevrolet Multi-Flex™ tailgates
- Easy installation requires no wire cutting or splicing
- No extra electronic components or batteries required
- Sleek, durable design suited for all work conditions
- Does not interfere with trailer or towing accessories

NEW

58267

NEW

58268

Prevents deployment of inner tailgate panel when ball mount is installed

Helps avoid costly tailgate damage

Sleek, durable design suited for all work conditions

Part #	Fits Receiver Size	Includes
58267 N	2"	Sensor cap and wiring harness
58268 N	2-1/2"	Sensor cap and wiring harness

N = NEW PRODUCT

RV HARNESSES

RV HARNESSES

For RV harness application guide see page 238

- Integrated block diodes isolate sensitive vehicle electronics from RV signals
- Uses towed vehicle's existing taillights, brake lights and turn signals
- Optional harness add-on equips vehicle with standard 4-way flat for towing a trailer (not available for all RV harnesses; see app guide)

58948

Connects a towed vehicle to an RV using a standard 4-way flat trailer plug

Simple plug-and-play design eliminates the need for cutting or splicing

Includes harness, 4-flat extension, mounting bracket and hardware

RV HARNESSES

SPLICE-IN RV HARNESS

- Connects a towed vehicle to an RV using a standard 4-way flat trailer plug
- Splices into vehicle's electrical system with included butt connectors
- Color-coded wires with wiring guide for easier installation
- Integrated block diodes isolate sensitive vehicle electronics from RV signals
- Uses towed vehicle's existing taillights, brake lights and turn signals
- Not compatible with PWM electrical systems

58979

Part #	Description
58979	Splice-in RV harness

RV HARNESSES

RV HARNESS DIODE KIT

- Allows RV to power lights only on the towed vehicle without power feeding back
- Requires trailer-side 4-way flat plug with 20' wires or similar

Part #	Amps / Block	Volts / Block	Includes
58999	3 amps	24 volts max	Four diode blocks / 12 spade terminals

58999

ELECTRICAL ADAPTERS

4-WAY FLAT

- Allows a standard 4-way flat to connect to other trailer plug types
- Informative, full-color retail packaging

57187

56476

57186

57183

57184

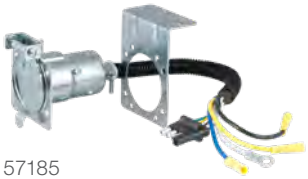
57185

57626

57676

57604

57624

57672

57674

57102

Part #	From Vehicle	To Trailer	Notes	Material
Single Output				
57184	4-way flat	7-way RV blade	See mounting brackets on pages 172 and 173	Plastic
57183	4-way flat	6-way round	See mounting brackets on pages 172 and 173	Die-cast
57185	4-way flat	7-way RV blade	Includes mounting bracket	Steel
57186	4-way flat	7-way RV blade	Includes wiring and components to splice in a brake controller connection	Plastic
57187	4-way flat	5-way flat	Ideal for towing a boat trailer with surge brakes	Plastic
57626[1]*	4-way flat	6-way round	Integrated test lamps display proper connections	Plastic
57676[1]	4-way flat	7-way RV blade	Integrated test lamps display proper connections	Plastic
56476	4-way flat	USCAR socket	Pair with #57015 for 4-way and 7-way RV blade output. See page 158	Plastic
Dual Output				
57604[1]	4-way flat	4-way flat 6-way round	--	Plastic
57624[1]*	4-way flat	4-way flat 6-way round	Integrated test lamps display proper connections	Plastic
57672[1]	4-way flat	4-way flat 7-way RV blade	--	Plastic
57674[1]	4-way flat	4-way flat 7-way RV blade	Integrated test lamps display proper connections	Plastic
57102[1]	4-way flat	4-way flat 7-way RV blade	Audible back-up alarm when vehicle in reverse (97 decibels)	Plastic

[1] Includes mounting bracket and hardware
* Continued while supplies last

ELECTRICAL ADAPTERS

ACCESSORY SOCKET

- Powers accessories with the vehicle's 2-, 4- or 5-way flat connector
- Provides a cigarette lighter type socket

Part #	From Vehicle	Output	Material
58312	2-way flat 4-way flat 5-way flat	Accessory socket power adapter	Plastic

58312

ELECTRICAL ADAPTERS

4-WAY ROUND

- Adapts a 4-way round vehicle socket to fit 4-way flat trailer plugs
- Simple plug-and-play design eliminates the need for cutting or splicing

58414

57444

57224 57225

Bulk #	Pkg #	From Vehicle	To Trailer	Material
58414	--	4-way round	4-way flat	Plastic
57224	57225	4-way round	4-way flat	Plastic
57444*	--	4-way round	4-way flat	Die-cast

* Continued while supplies last

ELECTRICAL ADAPTERS

6-WAY ROUND

- Allows a standard 6-way round to connect to other trailer plug types
- Simple plug-and-play design eliminates the need for cutting or splicing

57620 57621

57667

Bulk #	Pkg #	From Vehicle	To Trailer	Center Pin Function	Material
57620	57621	6-way round	4-way flat	--	Plastic
--	57667	6-way round	7-way RV blade	Taillights	Die-cast and plastic

ELECTRICAL ADAPTERS

6- OR 7-WAY WITH LED DUST COVERS

- LED tester confirms proper function of vehicle-side wiring connector
- Dust cover keeps connector clean when not in use
- Simple plug-and-play design eliminates the need for cutting or splicing

57627

57245

57255

57265

Part #	From Vehicle	To Trailer	Center Pin Function
57627	6-way round	4-way flat	--
57245	7-way RV blade	4-way flat	--
57255	7-way RV blade	6-way round	Auxiliary power
57265*	7-way RV blade	6-way round	Brake lights

* Continued while supplies last

57265 LED cover

ELECTRICAL ADAPTERS

7-WAY RV BLADE FOR LED TRAILER LIGHTS

Did you know?

These adapters are designed for vehicles with a lamp-out indicator. When towing a trailer with LED taillights, the low electrical draw of the LEDs will trigger the indicator. These adapters allow the vehicle to recognize the LED taillights and function normally.

57004

57005

- Allows a 7-way RV blade to connect to other trailer plug types
- Enables vehicles with a 7-way RV blade socket to recognize LED trailer lights
- Built-in, integrated resistors for computers that do not recognize LED lights
- Simple plug-and-play design eliminates the need for cutting or splicing

57003

Part #	From Vehicle	To Trailer	Material
57003	7-way RV blade	7-way RV blade	Plastic
57004	7-way RV blade	4-way flat 5-way flat	Plastic
57005	7-way RV blade	6-way round	Plastic

ELECTRICAL ADAPTERS

7-WAY RV BLADE AND ROUND

- Simple plug-and-play design eliminates the need for cutting or splicing

57240 57241

57250 57251

57260 57261

57660 57661

Bulk #	Pkg #	From Vehicle	To Trailer	Center Pin Function
57240	57241	7-way RV blade	4-way flat	--
57250	57251	7-way RV blade	5-way flat	--
57260	57261	7-way RV blade	6-way round	Auxiliary power
57660	57661	7-way RV blade	6-way round	Brake lights
57040	57041	7-way round	4-way flat	--

57040 57041

ELECTRICAL ADAPTERS

7-WAY RV BLADE WITH BACKUP ALARM OPTION

- Allows a 7-way RV blade to connect to other trailer plug types
- Integrated backup alarm sounds when vehicle is in reverse (97 decibels)
- Simple plug-and-play design eliminates the need for cutting or splicing

57724

57725

57720

57726

Part #	From Vehicle	To Trailer	Center Pin Function
57724	7-way RV blade	4-way flat	--
57725*	7-way RV blade	5-way flat	--
57720*	7-way RV blade	6-way round	Brake lights
57726	7-way RV blade	6-way round	Auxiliary power
57727	7-way RV blade	7-way RV blade (extender)	--

* Continued while supplies last

57727

DINGHY TOWING ADAPTER HARNESSES

- Plugs into CURT RV harness 4-flat to provide a standard connector under the dinghy vehicle's hood
- Allows for flexible mounting on the front of the dingy vehicle versus welded connector bracket
- 6' length is ideal for equipping dinghy vehicle for flat towing behind RV
- Some manual wiring required

58980

58981

Part #	From Dinghy Vehicle	To RV	Length	Material
58980	4-way flat	7-way RV blade	6 feet	Plastic
58981	4-way flat	6-way round	6 feet	Plastic

ELECTRICAL ADAPTERS

DINGHY TOWING ADAPTERS

- Ideal for connecting motorhomes to dinghy vehicle for flat towing
- UV-resistant coiled cable extends without scraping the ground
- Simple plug-and-play design eliminates the need for cutting or splicing
- Constructed from die-cast or durable plastic
- Informative, full-color, retail packaging

57271

57280

57281

57282

57283

57284

57285

57286

Part #	From Dinghy Vehicle	To RV	Extends	Included Socket	Socket Housing
57271	4-way flat	7-way RV blade	5 feet	--	Plastic
57280	4-way flat	7-way RV blade	8 feet	--	Plastic
57281	5-way flat	7-way RV blade	5 feet	--	Plastic
57282	5-way flat	7-way RV blade	8 feet	--	Plastic
57283	6-way round	7-way RV blade	8 feet	One 6-way round	Plastic and die cast
57284	7-way RV blade	7-way RV blade	8 feet	One USCAR 7-way RV blade	Plastic
57285	4-way round	7-way RV blade	8 feet	One 4-way round	Plastic and die cast
57286	6-way round	6-way round	8 feet	Two 6-way round	Die cast

PLUGS & SOCKETS

4-WAY FLAT

- Splices into existing wiring to supply power from the vehicle to the trailer
- Looped wires can also be used as a wire extension for an existing connector
- Constructed with 16-gauge bonded wires and durable molded rubber
- Operates on a two-wire system

58030 58031

58380 58381

58033

58032 58348

58349

58040 58041

58044

58345

58304

58344

58042 58355

58305

58050 58051

Bulk #	Pkg #	Pkg Kit#	Location	Wire Length	Description
58030	58031	58033[1]	Trailer	12"	Plug with bonded wire
58032	58348	58349[1]	Trailer	48"	Plug with bonded wire
58040	58041	58044[1] 58345[2]	Vehicle	60"	Socket with bonded wire
--	58304	58344[1]	Vehicle Trailer	12" 12"	Socket with bonded wire Plug with bonded wire
58042	58355	58305[1]*	Vehicle Trailer	48" 12"	Socket with bonded wire Plug with bonded wire
58050	58051	--	Vehicle Trailer	72"	Socket with bonded loop Plug with bonded loop
58380	58381	--	Vehicle Trailer	12"	Socket with bonded loop Plug with bonded loop
--	57220	--	Trailer	20 feet	Plug with bonded wire

[1] Includes snap locks and hardware (varies by part number)
[2] Includes snap locks, hardware and mounting bracket
* Continued while supplies last

57220

PLUGS & SOCKETS

2-WAY FLAT

- Splices into existing wiring to supply power to an electrical accessory
- 18-gauge looped wire can also be used as an extension for an existing connector
- Constructed with bonded wires and durable molded rubber

Bulk #	Pkg #	Location	Wire Length	Description
58020	58021	Vehicle Trailer	12"	Socket with bonded loop Plug with bonded loop

58020 58021

PLUGS & SOCKETS

4-WAY FLAT LICENSE PLATE LIGHT PLUGS

- 1-1/4" plug fits a typical license plate light hole
- Includes dust cover
- Constructed with durable molded rubber
- Refer to state and local laws before removing license plate light

58404 57404

58405 57405

58406

Bulk #	Pkg #	Location	Wire Length	Description
58404	57404	Vehicle Trailer	--	Adapter
58405	57405	Vehicle	36"	Socket with bonded wire
58406*	--	Vehicle	60"	Socket with bonded wire

* Continued while supplies last

PLUGS & SOCKETS

4- & 5-WAY FLAT DUST COVERS

- Protects connector from water, dust and road grime when not in use
- Helps prevent internal corrosion for a long life
- Attachment loop allows for fast, easy installation
- Constructed from durable molded rubber

58200 58201

58202 58203

Bulk #	Pkg #	Location	Material	Fits
58200	58201	Vehicle	Rubber	4-way flat
58750	--	Trailer	Rubber	4-way flat
--	58761	Vehicle Trailer	Rubber	4-way flat
58202	58203	Vehicle	Rubber	5-way flat

58750

58761

PLUGS & SOCKETS

5-WAY FLAT

- Ideal for trailers with surge brakes, commonly found on larger boat trailers
- Splices into existing wiring to supply power from the vehicle to the trailer
- Looped wires can also be used as a wire extension for an existing connector
- Constructed with 16-gauge wires and durable molded rubber

58530 58531

58545

58540 58541

Bulk #	Pkg #	Pkg Kit#	Location	Wire Length	Description
58530	58531	58545[1]*	Vehicle	60"	Socket with wire
58540	58541	--	Trailer	48"	Plug with wire
58550	58551	--	Vehicle Trailer	72"	Socket with loop Plug with loop

[1] Kit includes five snap locks, mounting bracket and hardware
* Continued while supplies last

58550 58551

PLUGS & SOCKETS

4-WAY ROUND

- Splices into existing wiring to supply power from the vehicle to the trailer
- Concealed terminals help ensure a reliable connection
- Constructed from strong die-cast metal
- Dust- and water-resistant design to withstand the elements

58060 58061

58070 58071

58671

58677

Bulk #	Pkg #	Pkg Kit#	Location	Material	Description
58060	58061	--	Trailer	Die-cast	Round plug
58070	58071	--	Vehicle	Die-cast	Round socket
--	58671	58677[1]	Trailer Vehicle	Die-cast Die-cast	Round plug (58060) Round socket (58070)

[1] Includes mounting bracket, wiring and hardware

PLUGS & SOCKETS

6-WAY ROUND

- Splices into existing wiring to supply power from the vehicle to the trailer
- Concealed terminals help ensure a reliable connection
- Spring-loaded dust covers keep connectors clean when not in use

58120

58082 58083

58093

58130

58080 58081

58092

58090 58091

Bulk #	Pkg #	Pkg Kit #	Location	Material	Description
58080	58081	--	Trailer	Die-cast	Round plug
58120	--	--	Trailer	Chrome plastic	Round plug
58082	58083	--	Trailer	Die-cast	Round plug with spring
58090	58091	--	Vehicle	Die-cast	Round socket
58130	--	--	Vehicle	Plastic	Round socket
--	58092	58093[1]	Trailer	Die-cast	Round plug (58080)
			Vehicle	Die-cast	Round socket (58090)

[1] Kit includes five snap locks, mounting bracket and hardware

PLUGS & SOCKETS

6-WAY SQUARE

- 6-way square connectors are commonly used on popup campers
- Splices into existing wiring to supply power from the vehicle to the trailer
- Looped wires can also be used as a wire extension for an existing connector

Part #	Location	Wire Length	Description
58034	Vehicle	12"	Square socket with loop
	Trailer		Square plug with loop
58035*	Vehicle	12"	Square socket with wire

* Continued while supplies last

58034

58035

PLUGS & SOCKETS

7-WAY ROUND

- 7-way round connectors are commonly used on semi- and utility trailers
- Splices into existing wiring to supply power from the vehicle to the trailer
- Constructed from strong die-cast metal

58170

58160 58161

58180 58181

Bulk #	Pkg #	Location	Material	Description
58170	--	Vehicle	Die-cast	Round socket
58160	58161	Trailer	Die-cast	Round plug
58180	58181	Trailer	Die-cast	Round plug with spring

PLUGS & SOCKETS

7-WAY RV BLADE

- Concealed terminals help ensure a reliable connection
- Ergonomic design offers a comfortable, more secure grip (#58145)
- Weather-resistant dust cover features a rubber insert to seal out moisture (#58155)

58140 58141

58145

58155

58190

58220

58150 58151

58417

58152

Bulk #	Pkg #	Pkg Kit#	Location	Material	Description
58140	58141	--	Trailer	Plastic	RV blade plug
--	58145	--	Trailer	Plastic	Heavy-duty RV blade plug
58150	58151	--	Vehicle	Plastic	RV blade socket
--	58155	--	Vehicle	Plastic	Heavy-duty RV blade socket
58190	--	--	Trailer	Die-cast	RV blade plug
58220	--	--	Vehicle	Steel	RV blade socket
--	58417	--	Vehicle	Plastic	RV blade socket with mounting bracket
--	--	58152[1]	Trailer	Plastic	RV blade plug
			Vehicle	Plastic	RV blade socket

[1] Kit includes six snap locks, mounting bracket and hardware

PATENTED. NO-DRILL. HITCH-MOUNTED DESIGN.

PLUGS & SOCKETS

EASY-MOUNT™ ELECTRICAL BRACKETS

- Allows connectors to be hitch-mounted with no drilling or clamping required
- Two threaded stainless steel bolts provide secure attachment to the hitch
- Notched design allows convenient access to pin & clip
- Steel body will not break like competitive plastic products
- Protected by a durable powder coat finish
- Bulk retail boxes contain 10 poly-bagged units
- Patent #9,016,707

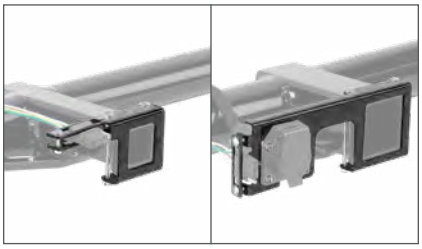

Slotted holes to fit multiple connector types (varies by part number, see table below)

58002

58001

58000

58003

Part #	Bulk Retail 10-Pack#	Receiver Tube Opening	Holds
58002	58002010*	1-1/4" x 1-1/4"	4- or 5-way flat sockets
58001	58001010	2" x 2"	4- or 5-way flat sockets
58000	58000010	2" x 2"	4- or 5-way flat and 6- or 7-way sockets
58003	--	2-1/2" x 2-1/2"	4- or 5-way flat and 6- or 7-way sockets

* Continued while supplies last

58001010
10-pack

ELECTRICAL SOCKET MOUNTING BRACKETS

- Allows for secure connector attachment to the vehicle or trailer hitch
- Steel body will not break like competitive plastic products
- Mounting hardware not included (excluding #58303)

58300 58301

58303

57207 12-pack 57208

58210

58222

57205 12-pack 57206

58230 58231

58290 58291

58510

58520

58300

57206

57204

57203 - 12-pack

57202

57201 - 12-pack

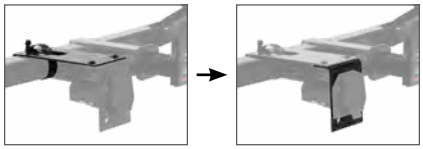
57201 mounting a 57205 to the trailer hitch

Bulk #	Bulk 12-Pack #	Pkg #	Fits	Description	Finish
For 4-Way Flat, 5-Way Flat and 6-Way Round Connectors					
58300	--	58301	4-way flat	--	Gloss black
--	--	58303	5-way flat	--	Carbide black
--	57207*	57208	4- or 6-way round sockets	--	Gloss black
58210	--	--	4- or 6-way round sockets	--	Zinc-plated
For 7-Way Round and 7-Way RV Blade Connectors					
58222	--	--	7-way round socket #58170	--	Zinc-plated
--	57205	57206	7-way RV blade socket #55415, #58150, #58220	Increased strength, slotted screw holes	Gloss black
58230	--	58231	7-way RV blade sockets #58150 and #58220	--	Zinc-plated
58290	--	58291	7-way RV blade sockets #58150 and #58220	--	Gloss black
58510	--	--	7-way RV blade sockets #58150 and #58220	Increased strength	Gloss black
58520	--	--	7-way USCAR factory Ford, GM & Nissan sockets	--	Gloss black
For Mounting Connector Brackets to Trailer Hitches					
--	57203	57204	4- or 5-way flat and 6-way round brackets	Short, universal clamp-on mount	Gloss black
--	57201	57202	7-way round or RV blade sockets	Long, universal clamp-on mount	Gloss black

* Continued while supplies last

ACCESSORIES & TESTERS

LENSES & COMBO LIGHTS

- Exceeds DOT requirements for stop, tail, rear and side reflectors, side markers and license plate illumination
- Two extra hookups provide for other lights
- Molded housing with standard red lenses
- Phosphor-bronze contacts for good connection in any weather
- Bolt-on mounting system for secure installation on the trailer

53440

53441

53445

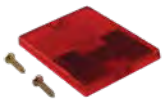
53515

Part #	Vehicle Side	Lens Color	License Plate Illumination
53440	Passenger	Red	No
53441	Driver	Red	Yes
53445	Rear replacement lens		
53515	Side replacement lens		

ACCESSORIES & TESTERS

SUBMERSIBLE COMBO LIGHTS

- Great for replacing lights on a boat trailer
- Exceeds DOT requirements for stop, tail, rear and side reflectors, clearance and license plate illumination
- Watertight design for full water immersion
- Bolt-on mounting system for secure installation on the trailer
- Legal for trailers over 80" wide

53452

53453

Part #	Vehicle Side	Lens Color	License Plate Illumination
53452*	Passenger	Red	No
53453*	Driver	Red	Yes

* Continued while supplies last

ACCESSORIES & TESTERS

TRAILER LIGHT KIT

- Exceeds DOT highway standards
- Designed to replace all necessary trailer lights on most trailers
- Easily connects to any standard automobile lighting system
- Frame mounting clips keep wires contained and protected
- Ideal for trailers up to 80" wide

53540

Part #	Length	Plug	Includes
53540	20'	4- flat	Two combination lights, two marker lights, license plate bracket and frame mounting clips

ACCESSORIES & TESTERS

TOWING LIGHTS

- Easily adds tow lights to a dinghy-towed vehicle or trailer without lights
- Non-scratch magnetic base protects vehicle finish
- Perfect for boats, RVs and flat towing applications
- 20' cord with 4-way flat plug allows for plug-and-play convenience
- Snap locks included for simple, secure splice-in connection
- Patent# D355,270

53204 53200

Bulk #	Pkg #	Length	Plug	Description
53200	53204[1]	20'	4-way flat	Auxiliary towing lights

[1] Includes a sturdy, reusable case

ACCESSORIES & TESTERS

CONNECTOR TESTERS

- Confirms proper function of vehicle-side wiring connector
- Constructed with LED lights for long-lasting use
- Integrated resistors for compatibility with Smart Trailer Tow Connection™ (#58272, #58273)

58260 58261

57505

58650

58270 58271

58272 58273

Bulk #	Pkg #	Description	Material
58260	58261	LED 4-way flat	Plastic
57505	--	LED 5-way flat	Plastic
58650	--	LED 6-way round	Plastic
58270	58271	LED 7-way RV blade	Plastic
58272[1]	58273[1]	LED 7-way RV blade	

[1] Integrated resistors compatible with Smart Trailer Tow Connection

Color-coded LEDs to easily distinguish each vehicle signal (#58272, #58273)

ACCESSORIES & TESTERS

BRAKE CONTROLLER TESTERS

- Tests vehicle wiring for battery voltage, brake voltage and signal circuits (#51498)
- Designed to bench test a brake controller for proper function (#51521)
- Tests brake voltage, pedal activation, short-circuit / overload and disconnect (#51521)

51498

51521

Bulk #	Tests	Plug	Socket
51498	Vehicle-side wiring functions	7-way RV blade	--
51521*	Brake controller unit	--	Quick plug

* Continued while supplies last

ACCESSORIES & TESTERS

BONDED 4-WIRE SPOOL

- Standard 4-way wire for rewiring a trailer or a similar application

57001

Part #	Gauge	Length	Description
57001	16	25'	Bonded four-wire spool (green, yellow, brown, white)

ACCESSORIES & TESTERS

SNAP LOCKS & WIRE NUTS

- Instantly splices two wires together using only a pliers
- Aluminum blade pierces both channels to eliminate any stripping or soldering
- Latching safety lock ensures a reliable connection
- Side gap allows for easy insertion of existing wire
- Constructed from high-impact plastic to protect against corrosion

58280 59906 59956 59905 59901

Bulk #	Gauge	Description	Quantity
58280	18-14	Tap connector	100
59906	18-14	Double-run tap connector	100
59956	18-14	Tap connector with gel sealant	100
59905	12-10	Tap connector	100
59901	18-10	Wire nut	100

ACCESSORIES & TESTERS

RING & SPADE TERMINALS

- Fastens wires down for a firm connection
- Perfect for installing towing electrical components or similar applications
- Vinyl-insulated to ensure a long-lasting connection
- Flared opening allows for easy wire insertion

59521 59522 59525 59523

59531 59534 59556 59538

59611 59621 59631

Bulk #	Gauge	Stud Size	Color	Quantity
Ring Terminals				
59521	16-14	#10	Blue	100
59522	16-14	1/4"	Blue	100
59525	16-14	5/16"	Blue	100
59523	16-14	3/8"	Blue	100
59531	12-10	#10	Yellow	100
59534	12-10	1/4"	Yellow	100
59556	12-10	5/16"	Yellow	100
59538	12-10	3/8"	Yellow	100
Spade Terminals				
59611	22-18	#10	Red	100
59621	16-14	#10	Blue	100
59631	12-10	#10	Yellow	100

ACCESSORIES & TESTERS

BUTT & QUICK CONNECTORS

- Quick connectors provide a firm wire connection with the option to disconnect later
- Butt connectors splice wires together with no taping required
- Perfect for installing towing electrical components or similar applications
- Vinyl-insulated to ensure a long-lasting connection
- Flared opening allows for easy wire insertion

59421 59422 59423

59592 59432 59593 59433

Bulk #	End	Gauge	Color	Quantity
Butt Connectors				
59421	--	22-18	Red	100
59422	--	16-14	Blue	100
59423	--	12-10	Yellow	100
Quick Connectors				
59592	Female	16-14	Blue	100
59432	Male	16-14	Blue	100
59593	Female	12-10	Yellow	100
59433	Male	12-10	Yellow	100

ACCESSORIES & TESTERS

HEAVY-DUTY FLASHERS, CIRCUIT BREAKERS & FUSES

- Recommended for applications where over-current protection is required
- Turn signal flashers are 12-volt, two-terminal flashers

58351

58310

58320

58440

58460

58470

57000

Bulk #	Amps	Description	Qty
Fuses and Holder			
58440*	10 amps	ATC fuse	100
58460*	20 amps	ATC fuse	100
58470	10 amps	In-line fuse holder	12
Relays			
57000	--	'04 to present Nissan Armada and Titan without factory tow package	1

* Continued while supplies last

Bulk #	Amps	Description	Qty
Flashers			
58310	14 amps	Flasher 1-4 lamps or 2-8 hazard	1
58320*	14 amps	Flasher 2-3 lamps or 2-6 hazard	1
Circuit Breaker			
58341	15 amps	Universal circuit breaker	1
58351	20 amps	Universal circuit breaker	1
58361	30 amps	Universal circuit breaker	1
58371	40 amps	Universal circuit breaker	1

ACCESSORIES & TESTERS

SLIT LOOM & CLAMP

- Protects loose wires against vibration and damage
- Keeps multiple wires contained in a single channel
- Slit lengthwise for easy application to wires
- Stronger and easier to use than a braided sleeve or wire spiral wrap

How to order slit loom

- Bulk tubing is sold by the foot and will be cut to length based on quantity. **Example:** 1 unit equals a 1' length of tube, 2 units equals a 2' length.
- Packaged tubing comes in 25 foot bundles

58823

59824

59826

59828

59825

Bulk #	Pkg #	Description	Amount
58823	--	1/4" convoluted slit loom	See above
59824	59825	3/8" convoluted slit loom	See above
59826	59827	1/2" convoluted slit loom	See above
--	59828	3/8" ID nylon loom clamp	See above

ACCESSORIES & TESTERS

ELECTRICAL TAPE & ZIP TIES

- Self-locking ties for securing wires and cables
- Zip tie mechanism allows for tight bundling
- Tapered end for easier insertion into lock

59728

59732

59740

Bulk #	Length	Quantity	Specifications	Description
59728	7-1/4"	100	--	Zip ties
59732	14-1/4"	100	--	Zip ties
59740	60'	10-pack	7 mil x 3/4"	Electrical tape

WEIGHT DISTRIBUTION

FEATURED PRODUCTS

Trailer-mounted TruTrack™

This unique quick-connect weight distribution hitch allows you to quickly couple and uncouple without resetting the spring bars.

True Course™ sway control

An innovative, electric sway control system that prevents sway during emergency maneuvers, adverse road conditions and heavy winds.

TruTrack™ 4-Point hitches

With active sway control and weight distribution, TruTrack™ offers smooth, safe towing for applications up to 15K lbs.

PRODUCT INDEX

180 What Is TruTrack™

182 Trailer-Mounted TruTrack™

184 Hitch-Mounted TruTrack™

186 Trunnion Bar WD Hitches

186 Round Bar WD Hitches

187 WD Shanks & Dual-Balls

188 True Course™ Sway Control

189 Sway Control

189 Hook-Up Brackets

190 Replacement Parts

TRUTRACK™

WEIGHT DISTRIBUTION + SWAY CONTROL

CURT weight distribution hitches disperse the tongue weight of a trailer more evenly and provide more control and safer towing. TruTrack™ combines this functionality with sway control to deliver the safest, smoothest towing possible.

Without weight distribution

With weight distribution

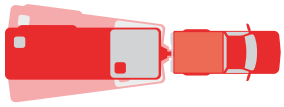

Without sway control

With sway control

MOUNTING OPTIONS

ALL-NEW Trailer-Mounted

Advantages

- Patent-pending trailer-mounted design simplifies coupling and decoupling
- Independent, two-part system eases lifting by keeping hitch weight on trailer
- Upgraded spring bar and handle mechanism

Classic Hitch-Mounted

Advantages

- Capacity ratings from 5k - 15k
- Optional shank-free version for deeper drop applications (#17600); shank sold separately

INTEGRATED SWAY CONTROL

How 2-Point (2P) Passive Sway Control Works

Friction resistance

Integrated sway control arms use friction to resist movement and keep the trailer aligned

Increased control

Heavy-duty, adjustable support brackets provide two points of passive sway control

INTEGRATED SWAY CONTROL (CONTINUED)

How 4-Point (4P) Active Sway Control Works

Spring-loaded bearings actively align trailer

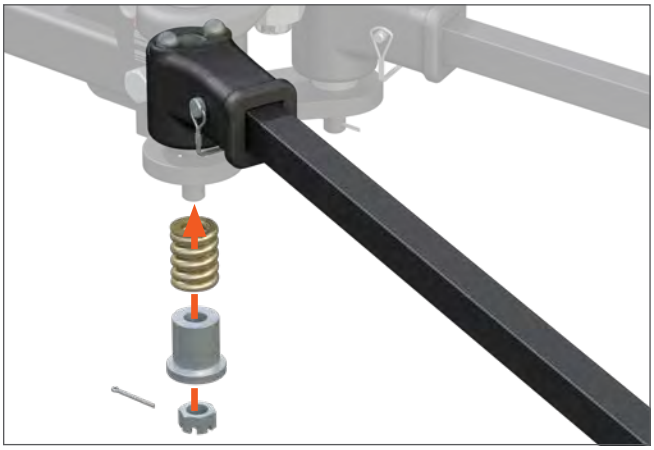

Scan to learn more

Bearings within the head maintain pressure on the spring bars, actively aligning the trailer with the vehicle

Active resistance

Lateral forces compress the bearings into a rotational groove to actively resist sway. The larger the sway event, the greater the resistance applied by the WD hitch

Increased control

Upward force on the ends of the spring bars tensions the bearings, directing them towards the 'home' position, increasing sway control

Smooth turning

During turns the bearings compress, allowing them to rotate freely. Afterwards they return to their tensioned, home position

THE TRUTRACK™ LINE-UP

Trailer-Mounted 4P	Trailer-Mounted 2P	Hitch-Mounted 4P	Hitch-Mounted 2P
17520	**17510**	**17499 / 17500 / 17501**	**17600 / 17601**
See page 182	See page 182	See page 184	See page 185

ALL-NEW, TRAILER-MOUNTED DESIGN!

TRAILER-MOUNTED TRUTRACK™ WD HITCHES

NEW

The revolutionary CURT TruTrack™ trailer-mounted weight distribution hitch features a quick-connect coupler that makes hitching up a breeze and doesn't require adjusting the trunnion bars once set up. Simply connect and disconnect with ease.

- Up to 10,000 lbs. GTW / 1,000 lbs. TW
- Prevents need to uninstall spring bars or remove hitch when disconnecting trailer
- Unique snap-up brackets mount trunnion bars with no additional tools needed to lift
- Innovative horn cradles trailer head, providing effortless coupling and locking into place with a single pin
- Integrated sway control reduces sway and levels the vehicle and trailer
- Brackets use friction to resist lateral movement and distribute weight evenly
- Adjustable brackets provide fixed support unlike spring bar chain models
- 7-hole, 2" shank can be adjusted 12-3/4" and flipped for 7-1/2" of rise or drop
- Available with fully integrated active sway control (4P) or passive sway control (2P) (see adjacent page for more information)
- Durable carbide powder coat finish

17510 2-Point

Scan to learn more

Trailer-mounted

Patent-pending design allows the spring bars and trailer head to remain connected to the trailer when uncoupled

Integrated brackets

Prevents the need to uninstall spring bars or remove hitch when disconnecting trailer

Advanced leveling

Spring-loaded bars leverage trailer weight and spread it across all axles evenly

TRAILER-MOUNTED TRUTRACK™ WD HITCHES

NEW

TruTrack™ 4-Point

- Four points of sway control work together to keep trailer aligned
- Integrated sway control actively resists sway and levels the vehicle and trailer
- Welded head with cast pieces and trunnion-style forged steel spring bars
- Uses spring & cam system with hardened components, instead of metal friction alone
- Black-oxide plated cams and stainless steel balls

17520 4-Point

Two neutral spring bar settings can be positioned in the 30° or 70° position (+/-5°)

Head-tilt adjustment feature provides 15° of adjustment for precise leveling

Adjustable brackets provide fixed support unlike spring bar chain models

Part #	GTW	TW	Bar Length	Adjustment Range	Max Rise / Drop
17520 N	8,000 - 10,000 lbs.	800 - 1,000 lbs.	35"	12-3/4"	7-1/2"

TruTrack™ 2-Point

- Two distinct points of sway control work together to keep trailer aligned
- Integrated sway control reduces sway and levels the vehicle and trailer
- Heavy-duty, fabricated head can be used for precise leveling

Two points of sway control use friction to keep trailer aligned

Head-tilt adjustment feature provides 15° of adjustment for precise leveling

Adjustable brackets provide fixed support unlike spring bar chain models

Part #	GTW	TW	Bar Length	Adjustment Range	Max Rise / Drop
17510 N	8,000 - 10,000 lbs.	800 - 1,000 lbs.	35"	12-3/4"	7-1/2"

2 INCH HITCH-MOUNTED TRUTRACK™ 4P WD HITCH

For additional shank options see page 187

Product Details

- Up to 15,000 lbs. GTW / 1,500 lbs. TW
- Four points of sway control work together to keep trailer aligned
- Welded head with cast pieces and trunnion-style forged steel spring bars
- Uses spring & cam system with hardened components, instead of metal friction alone
- Brackets use friction to resist lateral movement and distribute weight evenly while preventing trailer sway
- Durable carbide black powder coat finish, black-oxide plated cams and stainless steel balls

17500

Product Features

Integrated sway control actively resists sway and levels the vehicle and trailer

Quick, easy tilt adjustment feature simplifies setup and installation (excluding 17501)

Adjustable brackets provide fixed support unlike spring bar chain models

Did You Know?

TruTrack™ 4P is designed to work in two neutral spring bar settings to fit almost all A-frame trailers. The spring bars can be positioned in the 30° or 70° position (+/-5°). Adjustment takes only 15 to 20 minutes, start to finish.

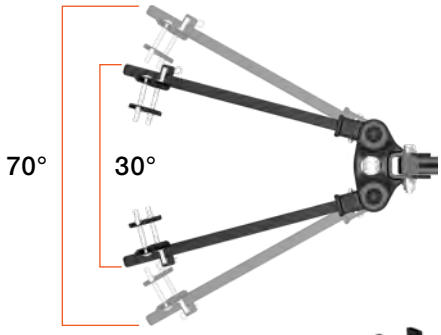

17499

17501

Part #	GTW	TW	Bar Length	Description
17499	5,000 - 8,000 lbs.	500 - 800 lbs.	35-9/16"	WD system only (trailer ball not included)
17500	8,000 - 10,000 lbs.	800 - 1,000 lbs.	35-9/16"	WD system (17500) and pre-torqued 2-5/16" trailer ball (40006)
17501	10,000 - 15,000 lbs.	1,000 - 1,500 lbs.	35-9/16"	WD system (17501) and pre-torqued 2-5/16" trailer ball (40030)

2 INCH

HITCH-MOUNTED TRUTRACK™ 2P WD HITCH

For additional shank options see page 187

Product Details

- Up to 10,000 lbs. GTW / 1,000 lbs. TW
- Two distinct points of sway control work together to keep trailer aligned
- Integrated sway control reduces sway and levels the vehicle and trailer
- Brackets use friction to resist lateral movement and distribute weight evenly
- Head tilt adjustment feature simplifies setup and eliminates need for washers
- 7-hole, 2" shank can be flipped for maximum adjustability
- Equipped with durable, forged steel spring bars for reliable strength
- Heavy-duty, fabricated head can be used for precise leveling
- Adjustable brackets provide fixed support unlike spring bar chain models
- Durable carbide powder coat finish

17601

Product Features

Two points of sway control use friction to distribute weight evenly, keeping trailer aligned

Head tilt adjustment feature simplifies setup and eliminates the need for washers

Adjustable brackets provide fixed support unlike spring bar chain models

17600

17601

Part #	GTW	TW	Bar Length	Description
17600	8,000 - 10,000 lbs.	800 - 1,000 lbs.	35"	Hitch head, spring bars and lift brackets (shank and ball not included)
17601	8,000 - 10,000 lbs.	800 - 1,000 lbs.	35"	Hitch head, shank, pre-torqued 2-5/16" trailer ball (40006), spring bars and lift brackets

2 INCH ROUND BAR WD HITCHES & KITS

For additional shank options see page 187

- Up to 14,000 lbs. GTW / 1,400 lbs. TW
- Weight ratings are limited to vehicle manufacturer's stated capacities
- Grease zerk fitting provides easy, continuous lubrication
- Heavy-duty, fabricated head with round, forged steel spring bars
- Features built-in sway control attachment tabs
- 2" shank can be flipped to provide necessary drop or rise
- Hookup brackets and lift handle allow for easy leveraging of spring bars
- Durable carbide black powder coat finish

17063

Kit #	Hitch #	GTW	TW	Bar Length	Kit Includes
--	17050	5,000 - 6,000 lbs.	500 - 600 lbs.	31-3/16"	--
--	17051	6,000 - 8,000 lbs.	600 - 800 lbs.	31-3/16"	--
17062	17052	8,000 - 10,000 lbs.	800 - 1,000 lbs.	31-3/16"	Sway control (17200), pre-torqued 2-5/16" trailer ball (40006) and chains pre-assembled to spring bars
17063	17057	10,000 - 14,000 lbs.	1,000 - 1,400 lbs.	31-3/16"	Sway control (17200), pre-torqued 2-5/16" trailer ball (40030) and chains pre-assembled to spring bars

2 INCH TRUNNION BAR KITS & WD HITCHES

- Up to 15,000 lbs. GTW / 1,500 lbs. TW
- Weight ratings are limited to vehicle manufacturer's stated capacities
- Heavy-duty, formed head with trunnion, forged steel spring bars
- Features built-in sway control attachment tabs
- 2" shank can be flipped to provide necessary drop or rise
- Hookup brackets and lift handle allow for easy leveraging of spring bars
- Durable carbide black powder coat finish

17422

Kit #	Hitch #	GTW	TW	Bar Length	Kit Includes
--	17300*	5,000 - 6,000 lbs.	500 - 600 lbs.	30-5/8"	--
--	17302	8,000 - 10,000 lbs.	800 - 1,000 lbs.	30-5/8"	--
17322	17332	8,000 - 10,000 lbs.	800 - 1,000 lbs.	28-3/8"	Sway control (17200), pre-torqued 2-5/16" trailer ball (40006) and chains pre-assembled to spring bars
17422	17333	10,000 - 15,000 lbs.	1,000 - 1,500 lbs.	28-3/8"	Sway control (17200), pre-torqued 2-5/16" trailer ball (40030) and chains pre-assembled to spring bars

* Continued while supplies last

2 INCH & 2½ INCH WEIGHT DISTRIBUTION SHANKS

For WD shank dual-ball attachments see page 101

- Provides an adjustable mount for most weight distribution hitches
- Features multiple holes for adjustable head height
- Can be flipped to provide necessary drop or rise (select models)
- 3/4" holes are spaced 1-1/4" from center to center
- Constructed from solid steel for reliable strength
- Protected by a durable black powder coat finish
- Limited to spring bar capacity

17133

17120

17134

17132

17125

Measuring a WD shank

See table for corresponding measurements

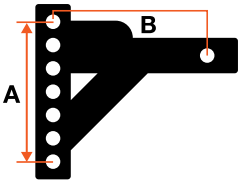

Drop position

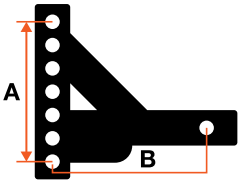

Rise position

Measuring a WD shank with WD hitch head

Use the diagrams below as a guide for measuring your WD hitch

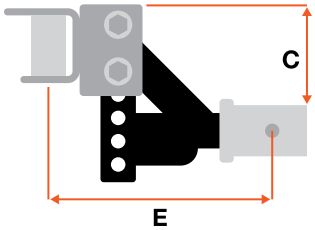

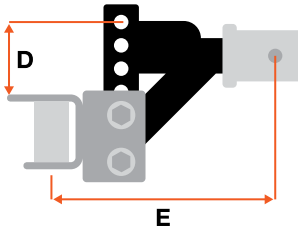

Part #	Weight Distribution Capacity (drop and rise)		Weight Carrying Capacity (drop only)		Measuring a WD Shank		Measuring a WD Shank with WD Hitch Head		
	GTW	TW	GTW	TW	Height (A)	Length (B)	Rise (C)	Drop (D)	Length (E)
For 2" x 2" Receiver Tube Openings									
17100	15,000 lbs.	1,500 lbs.	15,000 lbs.	1,500 lbs.	7-1/2"	8"			
17133†	15,000 lbs.	1,500 lbs.	15,000 lbs.	1,500 lbs.	7-1/2"	8"			
17102	15,000 lbs.	1,500 lbs.	15,000 lbs.	1,500 lbs.	7-1/2"	12"			
17103	15,000 lbs.	1,500 lbs.	15,000 lbs.	1,500 lbs.	7-1/2"	14"			
17120	15,000 lbs.	1,500 lbs.	15,000 lbs.	1,500 lbs.	8-3/4"	10"			
17121	15,000 lbs.	1,500 lbs.	15,000 lbs.	1,500 lbs.	10"	12"			
17122	15,000 lbs.	1,500 lbs.	15,000 lbs.	1,500 lbs.	10"	14"			
17123	15,000 lbs.	1,500 lbs.	15,000 lbs.	1,500 lbs.	11-1/4"	7"			
17134†	15,000 lbs.	1,500 lbs.	15,000 lbs.	1,500 lbs.	11-1/4"	7"			
17124*	15,000 lbs.	1,500 lbs.	15,000 lbs.	1,500 lbs.	6-1/4"	9"			
17125*	15,000 lbs.	1,500 lbs.	15,000 lbs.	1,500 lbs.	6-1/4"	8"			
For 2-1/2" x 2-1/2" Receiver Tube Openings									
17131†	15,000 lbs.	1,500 lbs.	15,000 lbs.	1,500 lbs.	7-1/2"	8"			
17132*†	15,000 lbs.	1,500 lbs.	15,000 lbs.	1,500 lbs.	12-1/2"	8"			

Measurements can vary per model of weight distribution hitch.

Use the diagrams above as a guide to measure your specific model.

* Not to be used in the rise position during weight distribution or weight carrying
† Forged steel construction

STOP SWAY BEFORE IT STARTS

TRUE COURSE™ TRAILER SWAY CONTROL SYSTEM

NEW

Product Details

- Prevents trailer sway by activating brakes independently of driver and brake controller
- Easy plug-and-play installation; mount module on trailer and plug in adapters
- Compatible with multiple makes and models and thoroughly tested on real vehicles
- Module acts as intermediary for the trailer brake system, bypassing brake signal
- LED indicator on module shows when system is active and ready
- OneControl® mobile integration provides in app notifications and system status
- Combats sway caused by side winds, slippery roads, sudden movement and emergencies
- Advanced patent-pending technology electronically detects dangerous trailer movement

OneControl® Auto BY LIPPERT

Download the new OneControl® Auto app!

AUTO

Download on the App Store

Get it on Google Play

51202

Product Features

Prevents major sway not controlled by the WD hitch by pulsating all trailer brakes

OneControl® RV BY LIPPERT

OneControl® Auto BY LIPPERT

OneControl® app sends real-time updates and notifications

Easy installation allows you to mount the module on the trailer frame and simply plug in

Part #	Plugs Into
51202 N	7-way RV blade

N = NEW PRODUCT LIPPERT

SWAY CONTROL KIT

Sway control reduces lateral movement while pulling a trailer. The diagrams below illustrate the effectiveness of using sway control units. Two sway control kits should be used for maximum control and stability.

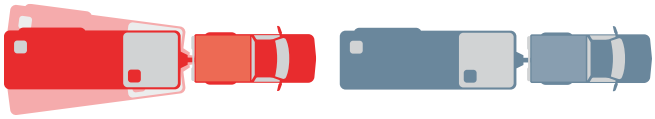

Without sway control With sway control

17200

17201

45822

40093 40010

Part #	Includes
17200	Sway control unit
	Trailer attachment ball, plate and eight bolts
	Hitch-mounted attachment ball (40093)
	Weld-on tab (45822)
	Mount reinforcement plate
	Spring clips, qty 2

Replacement Parts

Bulk #	Pkg #	Description
17201	--	Trailer attachment ball and hardware
19289	--	Spring clip
45822	--	Weld-on sway tab
40093	40010	Sway control attachment ball

2 INCH SWAY TAB BALL MOUNT

- Fits any 2" x 2" receiver tube opening
- Provides a mounting tab for a sway control trailer ball (ball sold separately)
- Anti-rattle accessory can be used to help stop vibration, see page 119

45820

45820 shown with 40093 ball (not included)

Coupled sway control (17200)

Part #	GTW / TW	Drop	Rise	Length	Ball Hole Size
45820	7,500 / 750 lbs.	2"	3/4"	7-1/2"	1"

HOOKUP BRACKETS

- Allows for repositioning of spring bars around an LP tank or other obstruction
- Replaces factory spring bar brackets or hangers
- Durable carbide powder coat finish

Part #	Description
17003	Clamp-on chain hangers
17005	Bolt-on chain hangers

17003

17005

REPLACEMENT PARTS

HITCH-MOUNTED TRUTRACK™

Fig #	Part #	Description	Fits
1	19276	Spring bar	17600, 17601
1	17535	Spring bar	17499
1	17536	Spring bar	17500
1	17537	Spring bar	17501
2	17506	Head (ball not included)	17499
2	17507	Head (ball not included)	17500
2	17509	Head (ball not included)	17501
2	19277	Head (ball not included)	17600, 17601
3	17512	Lift handle	All
4	17508	Support brackets, 6", qty 2	All
4	17515	Support brackets, 8", qty 2	All
4	17516	Support brackets, 10", qty 2	All
4	17517	HD support brackets, 6", qty 2	All
4	17518	HD support brackets, 8", qty 2	All
4	17519	HD support brackets, 10", qty 2	All
5	17513	L-pins & clips	All
6	17550	Hardware kit includes: - 3/4" x 4" hex bolt, qty 1 - 3/4" x 5" hex bolt, qty 1 - 3/4" nylock nuts, qty 2 - Lynch pin, qty 2 - Head tilt spacer, qty 2 - Hitch pin & clip	17499, 17500
6	17554	Hardware kit includes: - 3/4" x 5" hex bolt, qty 2 - 5/8" x 1-1/2" hex bolt, qty 1 - 3/4" conical washers, qty 4 - 1/2" flat washers, qty 2 - Adjustment rod, short, qty 1 - Adjustment rod, long, qty 1 - 3/4" nylock nuts, qty 2 - Lynch pin, qty 2 - Hitch pin & clip	17501
6	19278	Hardware kit includes: - 3/4" x 5" hex bolt, qty 2 - 3/4" conical washers, qty 4 - 3/4" nylock nuts, qty 2 - 5/8" hex bolt, qty 1 - 5/8" square-head bolt, qty 1 - Hitch pin & clip	17600, 17601
7	17109	Retainer clip package	17600, 17601

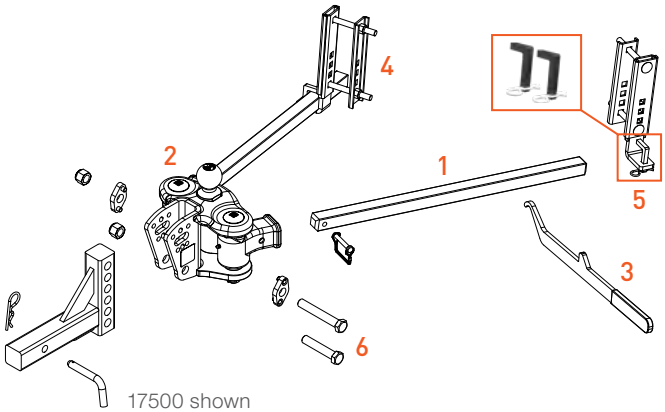

17500 shown

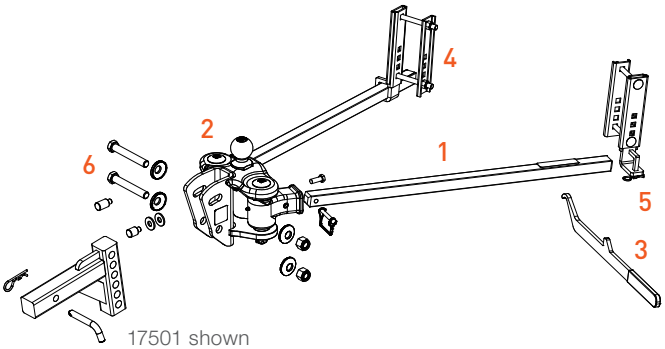

17501 shown

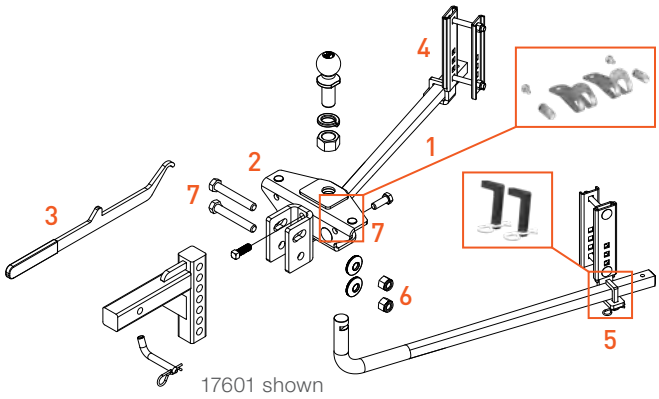

17601 shown

TRAILER-MOUNTED TRUTRACK™

Fig #	Part #	Description	Fits
1	19298	Complete bracket kit, qty 1	17510, 17520
2	19299	Horn only, qty 1	17510, 17520
3	19300	Hardware kit includes: - 3/4" x 5" hex bolt, qty 2 - 3/4" conical washers, qty 4 - 3/4" nylock nuts, qty 2 - 3/4" clevis pin & clip, qty 1	17510, 17520

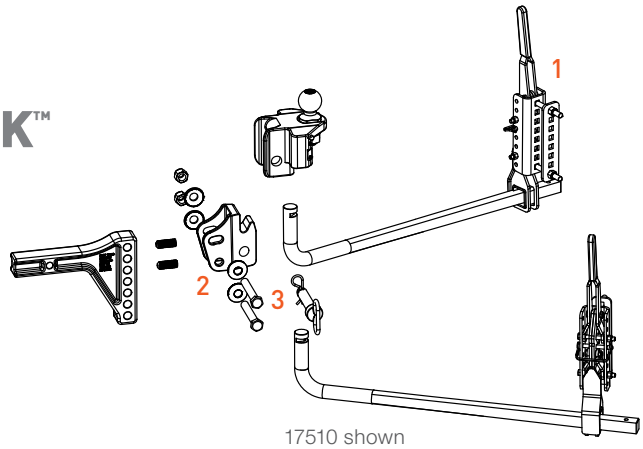

17510 shown

ROUND BAR WD

Fig #	Part #	Description	Fits
1	17071	Spring bar with assembled chain	17050
1	17072	Spring bar with assembled chain	17051
1	17073	Spring bar with assembled chain	17052, 17062
1	17074	Spring bar with assembled chain	17057, 17062
2	17075	Head	All
3	17208	Hookup brackets, qty 2 - 17112 required to lift brackets	All
4	17112	Lift handle	17208
5	17111	Chain kit includes: - Chains, qty 2 - 3/8" U-bolts, qty 2 - 3/8" flat washers, qty 4 - 3/8" nylock nuts, qty 4	
6	17076	Hardware kit includes: - 3/4" x 4-1/2" hex bolts, qty 2 - 3/4" conical washers, qty 2 - 1/2" flat washers, qty 7 - 3/4" nylock nuts, qty 2 - Adjustment rod, qty 1 - Hitch pin & clip	All
7	19302	Retainer clip package	All

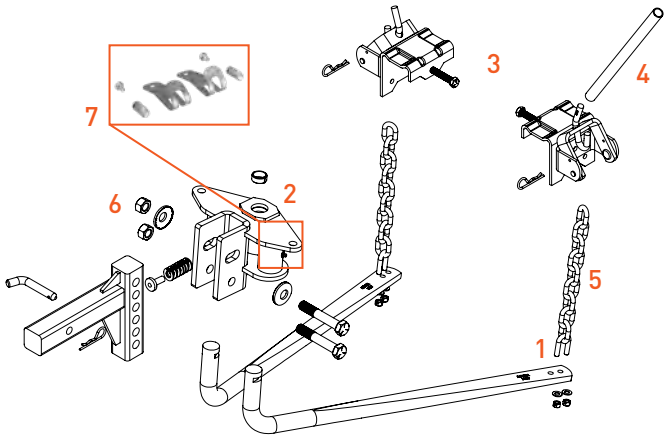

TRUNNION BAR WD

Fig #	Part #	Description	Fits
1	17303	Spring bar with assembled chain	17302
1	17336	Spring bar with assembled chain	17332
1	17337	Spring bar with assembled chain	17333
2	17307	Head	All
3	17008	Hookup bracket, qty 1	All
4	17112	Lift handle	All
5	17312	Head angle adjustment rod kit	All
6	17350	Hardware kit includes: - 3/4" x 5" hex bolts, qty 2 - 5/8" x 1-3/4" hex bolt, qty 1 - 1/2" x 2" hex bolts, qty 2 - 1/2" x 4" hex bolts, qty 2 - 3/4" conical washers, qty 4 - 1/2" flat washers, qty 2 - 3/4" nylock nuts, qty 2 - Adjustment rod, short, qty 1 - Adjustment rod, long, qty 1 - Bracket clips, qty 2 - Hitch pin & clip	All
7	17314	Conical washers, qty 4	All
8	17111	Chain kit includes: - Chains, qty 2 - 3/8" U-bolts, qty 2 - 3/8" flat washers, qty 4 - 3/8" nylock nuts, qty 4	All

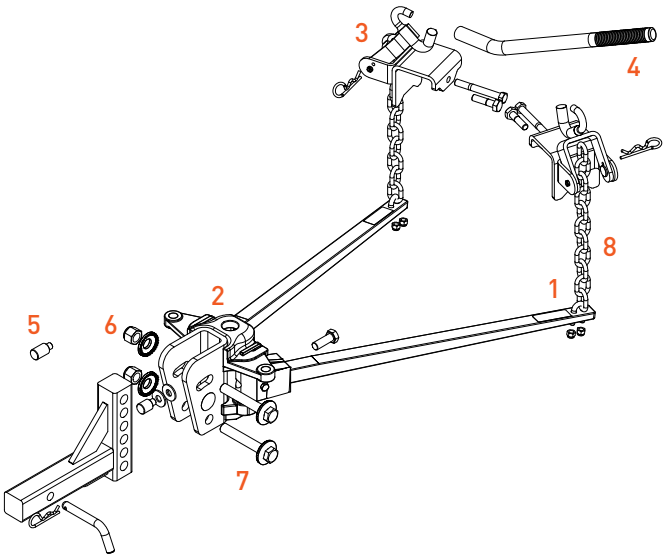

5TH WHEEL HITCHES

FEATURED PRODUCTS

Scan QR code for current applications or visit curtmfg.com

CrossWing™ hitch

CrossWing's™ unique connection auto-adjusts to guide the kingpin into place and is lightweight, allowing for an easy installation.

A-Series™ hitch

Features a self-resetting, lockable handle and is built with high-strength, interlocking jaws that greatly reduce chucking noises.

S-Series™ slider

Our new sliders feature a quiet, solid design and provide essential turning clearance for short-bed trucks. Available in 20K and 25K.

PRODUCT INDEX

196 How to Mount a 5th Wheel Hitch

198 CrossWing™ 5th Wheels

201 A-Series™ 5th Wheels

204 PowerRide™ 5th Wheels

206 E-Series™ 5th Wheels

210 Puck System Base Rails

211 Puck System Legs & Rollers

212 5th Wheel Sliders

213 Brackets & Base Rails

216 X5™ Adapter Plates

217 5th Wheel Accessories

220 5th Wheel Electrical

5TH WHEEL HITCHES

CURT 5th wheel hitches are available in four distinct series. **To determine the best configuration for the customer's vehicle, see 'Mounting a 5th wheel hitch' on page 196.**

CROSSWING™

- **Rated for 20,000 lbs. GTW, page 198**
- Self-guiding head guides kingpin into place
- 65% lighter than most traditional 5th wheels

A-SERIES™

- **Options rated up to 30,000 lbs. GTW, page 201**
- Cast yoke with poly-torsion inserts for stable towing
- Self-resetting handle for fewer steps while coupling

POWERRIDE™

- **Rated for 30,000 lbs. GTW, page 204**
- Tough, professional-grade, 30K capacity with enhanced ergonomics and functionality
- Multi-directional, cast yoke head for a smooth ride

E-SERIES™

- **Rated for 16,000 lbs. GTW, page 206**
- Economic design for budget-conscious customers
- Dual-pivoting head with anti-rattle skid plate

Feature	CrossWing	PowerRide	A-Series	E-Series
Pivoting Mechanism	Articulating head	Cast yoke (two pivot points)	Cast yoke (two pivot points)	10° dual-pivoting head
Handle Operation	Single-throw, quarter-turn	Single-throw, self-resetting handle	Single-throw, self-resetting handle	Single handle
Jaw Type	Funnel system	Dual, interlocking	Dual, interlocking	Locking bar
Coupling Indicator	Visible contact surface	Yes	Yes	No
Head Removal	Not applicable	One-pin	One-pin	Two-pin
Compatible with Sidewinder or Turning Point	Yes (wedge required)	Yes (wedge required)	Yes (wedge required)	Yes (wedge required)
Capacities Available	20K	30K	16K, 20K, 25K, 30K	16K
Finish	Carbide black	Teridium grey	Carbide black	Carbide black
Warranty	Limited lifetime	Limited lifetime	Limited lifetime	Limited lifetime

5TH WHEEL MOUNTING OPTIONS

OEM Puck System Products

Puck system legs and adapters use a simple quarter-turn anchor system to easily and securely drop into the truck bed pucks built into many pickups today.

- Options available for Ford, GM, Nissan and Ram
- Compatible with most CURT 5th wheel hitches
- **See page 210 for long- and short-bed options**

5th Wheel Sliders

CURT sliders and rollers provide 12" of additional clearance between the truck cab and trailer, displacing the 5th wheel coupling point for making tight turns.

- Ideal for increasing clearance for short-bed trucks
- Available in 20K and 25K capacities
- **See page 212 for full features and benefits**

Custom Under-Bed Brackets

Each designed to fit a specific truck application, our custom brackets install in less time and provide a solid mount for our industry-standard base rails.

- Vehicle-specific fit reduces or eliminates drilling
- Protected by a rust-resistant liquid A-coat
- **See page 213 for application information**

Industry-Standard Base Rails

CURT industry-standard base rails accept any 5th wheel hitch with industry-standard mounting points. They are available in capacities of 25K and 40K.

- Durable powder coat finish in multiple color options
- Co-cured in a rust-resistant liquid A-coat
- **See page 213 for application information**

X5™ Adapter Plates

X5 adapter plates allow a gooseneck hitch to become a 5th wheel mount. They drop into the gooseneck hole and provide a set of industry-standard base rails.

- Compatible with EZr™, Double Lock™ and select competitor models
- Compatible with CURT 5th wheels up to 20,000 lbs.
- **See page 216 for full features and benefits**

5th Wheel Accessories

We offer a number of accessories to help improve 5th wheel operation and safety while towing, including 5th wheel wedges, locks, noise dampeners and more.

- Lube plates and sound pads for smooth operation
- Safety chain loops and locks for improved safety
- **See pages 217 - 219 for 5th wheel accessories**

MOUNTING A 5TH WHEEL HITCH

There are several components that make up a 5th wheel hitch, and these components are determined by truck type and customer preferences. Answer the following questions to help choose the right hitch for your customer.

What Size is the Truck Bed?

The length of the truck bed will determine which type of mounting platform the 5th wheel hitch requires: legs or a slider. **Review each configuration and ensure adequate clearance before purchase.**

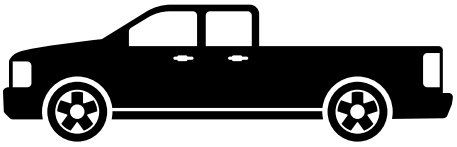

Long-bed (8 feet)

5th wheel legs are the standard 5th wheel mounting method. A long-bed truck should provide the necessary room for this option.

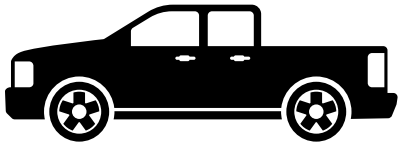

Short-bed (under 8 feet)

A 5th wheel slider is recommended on short-bed trucks. A slider adds clearance between the cab and the trailer when turning.

Measuring for a 5th wheel roller

1. Trailer width ÷ 2 = X
2. Distance from truck cab to coupling point = Y
3. Truck-trailer clearance: Y - X = Z

If Z is negative you need a 5th wheel slider

Scan to learn more

OEM PUCK SYSTEMS

Many trucks today, specifically from Ford, GM, Nissan and Ram, come with a built-in mounting platform in the bed called a puck system. A puck system makes installing a CURT 5th wheel hitch very easy.

Long-bed with OEM puck system

If the long bed has a puck system, select a 5th wheel hitch with OEM puck system legs or rails.

See our complete kits starting on page 203.

Short-bed with OEM puck system

If the short bed has a puck system, select an OEM puck system slider or rail option to mount the 5th wheel.

See our complete kits starting on page 203.

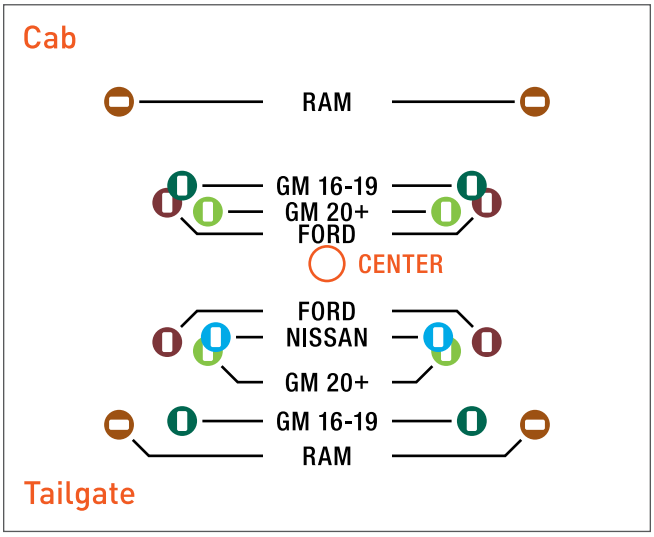

Puck system locations by manufacturer

PERMANENT RAIL SYSTEMS

If your customer prefers fixed rails in the truck bed, select a vehicle-specific, under-bed bracket kit and corresponding base rails to mount the 5th wheel hitch.

Long-bed

1. See page 213 for available bracket applications.
2. See page 213 for corresponding base rails.
3. **Select a 5th wheel hitch from the 'Long-Bed Options' starting on page 202.**

3. 5th wheel with legs

2. Above-bed base rails

1. Custom under-bed brackets

Short-bed

1. See page 213 for available bracket applications.
2. See page 213 for corresponding base rails.
3. **Select a 5th wheel hitch from the 'Short-Bed Options' starting on page 202.**

3. 5th wheel with slider

2. Above-bed base rails

1. Custom under-bed brackets

GOOSENECK TO 5TH WHEEL SYSTEMS

If your customer prefers the option of a gooseneck hitch, allowing for complete removal of the 5th wheel system and providing an unobstructed truck bed, select one of the options below.

CrossWing™ 5th wheel option

1. See page 240 for available gooseneck hitches.
2. **See page 199 for CrossWing™ single-point.**

2. CrossWing™ single-point 5th wheel

1. Gooseneck hitch or OEM puck system components

X5™ adapter bed rail option

1. See page 240 for available gooseneck hitches.
2. See page 216 for a corresponding X5 adapter.
3. **Select a 5th wheel hitch starting on page 194.**

3. 5th wheel with legs or slider

2. Above-bed X5 adapter

1. Under-bed gooseneck hitch kit

CROSSWING™

20K GTW LIGHTWEIGHT 5TH WHEEL HITCH

Scan to learn more

Rail-Mount & Single-Point

- Premium steel construction offers robust 20,000-lb. capacity
- 65% lighter than most traditional 5th wheels
- Reinforced head connection point for superior strength and peace of mind
- Head channel guides kingpin into place for easier hookup
- Allows fore, aft and lateral head articulation when connecting on uneven terrain
- Three points of height adjustment (see table)
- Premium, carbide textured black finish
- Tested for safety in accordance with SAE J2638
- Not compatible with X5™ adapter

16600 - industry-standard rail hitch

See page 210 for puck system mounting options

Product Features

65% lighter than most traditional 5th wheel hitches (main body weighs up to 70 lbs.)

Unique coupling system eliminates guesswork by offering visible contact surface

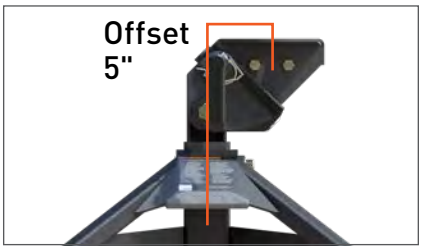

Coupling point offsets 5" rearward for added turning clearance (16600 only)

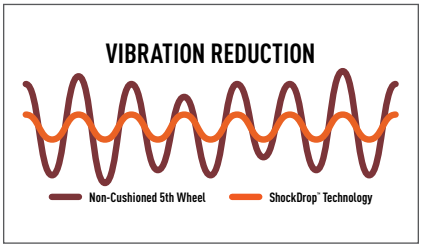

Features patent-pending ShockDrop technology to reduce jerking and jarring for a more comfortable towing experience

Easy-to-reach release handle for ergonomic locking and unlocking operation of the head from the side of the truck bed

Head piece permanently installs onto kingpin, allowing head channel to guide the kingpin into place for easier hookup

Part #	Description	GTW / Vertical Load	Offset	Body Weight	Height Range
16600	Industry-standard rail hitch	20,000 / 5,000 lbs.	5"	60 lbs.	16-3/8" - 20-3/8"

LIPPERT

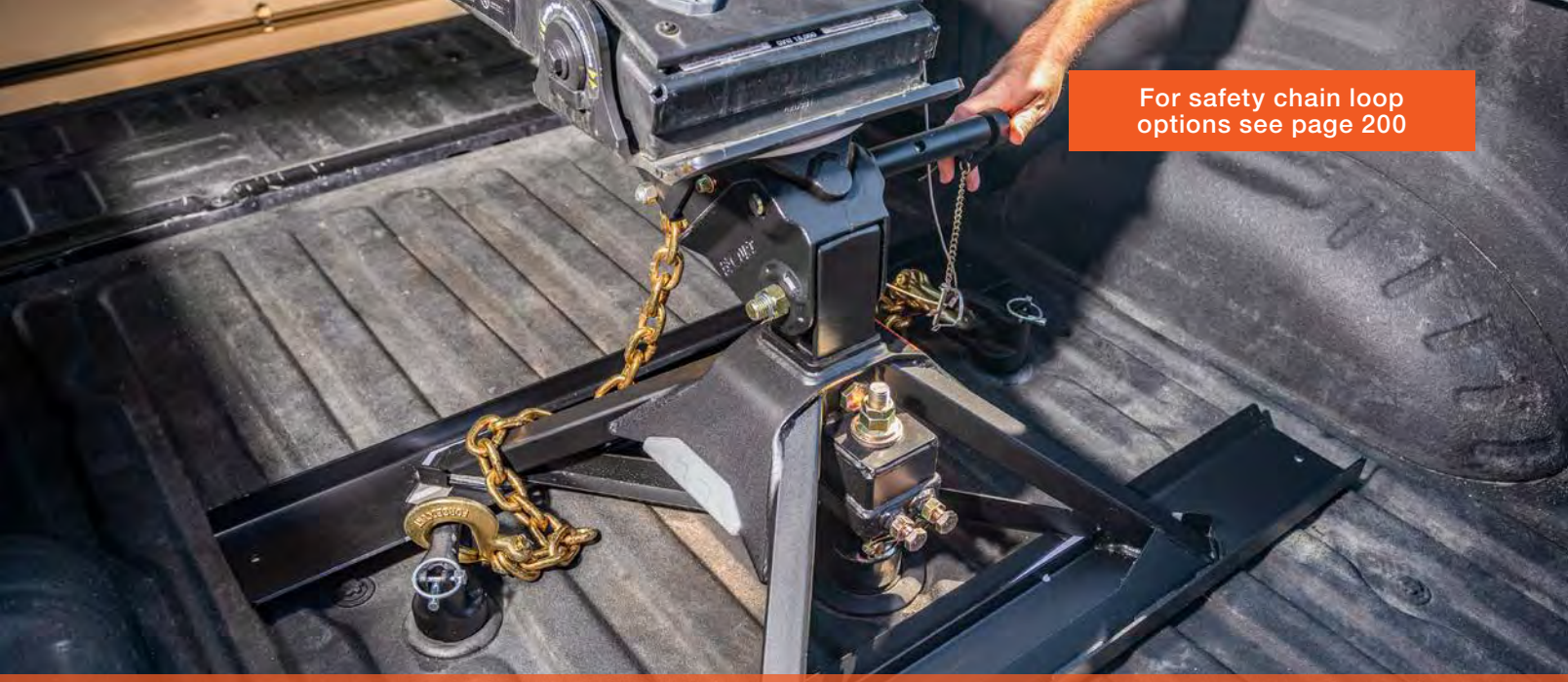

For safety chain loop options see page 200

LIGHTWEIGHT WITH DIRECT-STRIKE COUPLING

20K GTW

SINGLE-POINT 5TH WHEEL HITCH

Single-Point Specific

- Mounts over the top of most standard height 2-5/16" aftermarket and OEM gooseneck balls
- Bed protector supports distribute forces across the truck bed, adding support and reducing bed wear while protecting the bed from fore-and-aft abrasions during starts and stops (#16040)
- #16602 intended for flatbed applications, bed protector supports not required

16051 single-point kit

Mounts over the top of most standard height 2-5/16" aftermarket and OEM gooseneck balls

Coupling point offsets 8.4" rearward for added turning clearance (16051 / 16602 only)

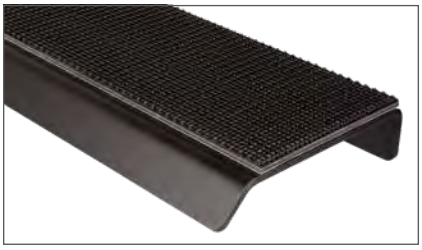

Bed supports with polyethylene inserts and rubber membrane deter sliding and scuffing

Part #	Description	Intended Use	GTW / Vertical Load	Offset	Body Weight	Height Range
16051	Single-point hitch (16602) with bed protector supports (16040)	Standard truck beds	20,000 / 5,000 lbs.	8.4"	70 lbs.	16-3/8" - 20-3/8"
16602	Single-point hitch only	Flatbed truck beds	20,000 / 5,000 lbs.	8.4"	70 lbs.	16-3/8" - 20-3/8"
16040	Single-point hitch bed protector supports only	Replacement part	--	--	--	--

CROSSWING™ SAFETY CHAIN LOOPS

- Easy to install with provided hardware
- Wide openings accept heavy-duty hooks and chains
- Durable carbide black powder coat finish

16615

Provides a solid attachment point for 5th wheel safety chains in your truck bed

Provides a solid attachment point for 5th wheel safety chains in your truck bed

16000

16612

16614

16613

Part #	GTW	For Use With	Includes	Finish
16612	20,000 lbs.	CrossWing industry-standard rail 5th wheel	Safety chain loops and CrossWing connection plate	Carbide black
16614	20,000 lbs.	CrossWing single-point 5th wheel	Safety chain loop plate and CrossWing connection plate	Carbide black
16613	20,000 lbs.	CrossWing industry-standard rail or single-point 5th wheel	CrossWing connection plate	Carbide black
16600	20,000 lbs.	All industry-standard base rails	Safety chain loops	Carbide black
16615	20,000 lbs.	CrossWing single-point 5th wheel	Safety chain loop plate	Carbide black

CROSSWING™ SINGLE-POINT SAFETY CHAIN LOOP COMPATIBILITY

If your safety chain loops fall within the shaded area, no additional safety chain accessories are required. See table below for CURT gooseneck hitch safety chain requirements.

Part #	Notes
60615, 60702, 60642, 60614, 60633, 61052, 65500	Can use existing gooseneck safety chain loops / anchors
60692, 60639	Can use existing gooseneck safety chain loops / anchors. GM 16 - 19 requires additional safety chain 16614 kit
60607, 60611, 60619, 60626, 60618, 60638, 61100	Requires additional safety chain 16614 kit

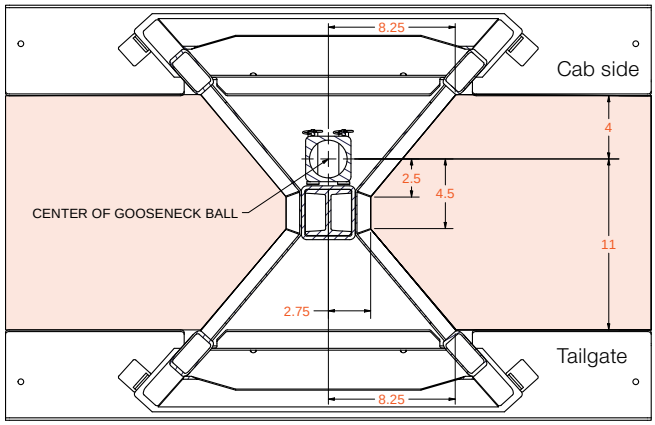

A-SERIES™

16K GTW **A16™ HITCH**

20K GTW **A20™ HITCH**

25K GTW **A25™ HITCH**

30K GTW **A30™ HITCH**

Product Details

- Up to 30,000 lbs. GTW / 7,500 lbs. vertical load
- Extra wide head opening for easier coupling
- Cast yoke and poly-torsion inserts suppress shock loads and reduce noise
- Constructed with a cast steel main body for a more precise build (A25 and A30 only)
- Offers three height adjustment positions to adapt to each unique truck bed
- Compatible with kingpin extension boxes, including common pivoting pin boxes (wedge #16992 required)
- Includes a polyethylene lube plate to eliminate messy grease deposits
- Protected by a highly durable carbide black powder coat finish
- Tested for safety in accordance with SAE J2638
- Patent# 8,827,298

16190

Operational Features

Lockable handle self-resets to the ready-to-couple position after the hitch is uncoupled

Fully articulating torsion head for controlled coupling and stable towing

Three-position coupling indicator clearly shows coupling status

Design Features

High-strength, interlocking jaws fully wrap the kingpin to minimize noise

Alignment pegs and accessible mounting bolts for simple leg-to-body attachment (excl A16)

Fast, one-pin head removal makes moving easy with smaller, lighter pieces

A-SERIES™ INDUSTRY-STANDARD RAIL KIT OPTIONS

16120 - A16 head with standard legs

16181 - A25 head with standard legs and base rails

16531 - A20 head with S20 slider

16651 - A25 head with S25 slider and base rails

Kit #	Head Series	GTW / Vertical Load	Kit Includes				Height Range
			Hitch with Standard Legs #	Head Only #	Slider Only #	Base Rails #	
Long-Bed Options							
16120	A16	16,000 / 4,000 lbs.	16120	--	--	--	13" - 17"
16121	A16	16,000 / 4,000 lbs.	16120	--	--	16200	14" - 18"
16140	A20	20,000 / 5,000 lbs.	16140	--	--	--	13" - 17"
16141	A20	20,000 / 5,000 lbs.	16140	--	--	16200	14" - 18"
16180	A25	25,000 / 6,250 lbs.	16180	--	--	--	13" - 17"
16181	A25	25,000 / 6,250 lbs.	16180	--	--	16200	14" - 18"
16190	A30	30,000 / 7,000 lbs.	16190	--	--	--	13" - 17"
16191	A30	30,000 / 7,000 lbs.	16190	--	--	16205	14" - 18"
Short-Bed Options							
16052	A16	16,000 / 4,000 lbs.	--	16520	16564	--	17-1/2" - 21-1/2"
16053	A16	16,000 / 4,000 lbs.	--	16520	16564	16204	18-1/2" - 22-1/2"
16531	A20	20,000 / 5,000 lbs.	--	16540	16564	--	17-1/2" - 21-1/2"
16631	A20	20,000 / 5,000 lbs.	--	16540	16564	16204	18-1/2" - 22-1/2"
16551	A25	25,000 / 6,250 lbs.	--	16580	16574	--	17-1/2" - 21-1/2"
16651	A25	25,000 / 6,250 lbs.	--	16580	16574	16204	18-1/2" - 22-1/2"

For a guide in selecting the mounting system for your customer's truck, see page 195

A-SERIES™ PUCK SYSTEM KIT OPTIONS

To learn more about puck systems see page 210

16070 - 2020 Chev / GMC legs with A30 head

16698 - Chev / GMC adapter with A20 & S20

NEW

16057 - GM / Ford base rail adapter with A25 & S25

Puck system products require a vehicle with a factory-installed 5th wheel prep package for installation

Make / Model	Bed	Years	GTW / Vertical Load	Kit #	5th Wheel Head		OEM Puck Products		Slider Only #	Height Range
					Head #	Series	Part #	Description		
Chevrolet / GMC										
Silverado Sierra 2500 HD 3500 HD	6.75'	20 - 24	25,000 / 6,250 lbs.	16057 N	16580	A25	16027	Rail adapter	16574	19" - 23"
		16 - 19	16,000 / 4,000 lbs.	16054*	16520	A16	16023*	Roller adapter	16564	19" - 23"
			20,000 / 5,000 lbs.	16698*	16540	A20	16023*	Roller adapter	16564	19" - 23"
			25,000 / 6,250 lbs.	16059 N	16580	A25	16050	Rail adapter	16574	20" - 24"
	8'	20 - 24	16,000 / 4,000 lbs.	16091	16520	A16	16029	Legs	--	13" - 17"
			20,000 / 5,000 lbs.	16092	16540	A20	16029	Legs	--	13" - 17"
			25,000 / 6,250 lbs.	16093	16580	A25	16029	Legs	--	13" - 17"
			30,000 / 7,000 lbs.	16070	16590	A30	16024	Legs	--	13" - 17"
		16 - 19	16,000 / 4,000 lbs.	16063	16520	A16	16025	Legs	--	13" - 17"
			20,000 / 5,000 lbs.	16064	16540	A20	16025	Legs	--	13" - 17"
			25,000 / 6,250 lbs.	16066	16580	A25	16025	Legs	--	13" - 17"
Ford										
F-250 F-350 Super Duty	6.75'	11 - 23	16,000 / 4,000 lbs.	16675*	16520	A16	16020*	Roller system	--	17 - 1/2" - 21 - 1/2"
			20,000 / 5,000 lbs.	16676*	16540	A20	16020*	Roller system	--	17 - 1/2" - 21 - 1/2"
			25,000 / 6,250 lbs.	16057 N	16580	A25	16027	Rail adapter	16574	19" - 23"
	8'	11 - 23	16,000 / 4,000 lbs.	16033	16520	A16	16017	Legs	--	13" - 17"
			20,000 / 5,000 lbs.	16034	16540	A20	16017	Legs	--	13" - 17"
			25,000 / 6,250 lbs.	16036	16580	A25	16017	Legs	--	13" - 17"
Nissan										
Titan XD	8'	16 - 24	16,000 / 4,000 lbs.	16073	16520	A16	16026	Legs	--	13" - 17"
			20,000 / 5,000 lbs.	16074	16540	A20	16026	Legs	--	13" - 17"
Ram										
2500 3500	6.75'	13 - 24	16,000 / 4,000 lbs.	16056*	16520	A16	16022*	Roller adapter	16564	19" - 23"
			20,000 / 5,000 lbs.	16695*	16540	A20	16022*	Roller adapter	16564	19" - 23"
			25,000 / 6,250 lbs.	16058 N	16580	A25	16042	Rail adapter	16574	20" - 24"
	8'	13 - 24	16,000 / 4,000 lbs.	16043	16520	A16	16021	Legs	--	14" - 18"
			20,000 / 5,000 lbs.	16044	16540	A20	16021	Legs	--	14" - 18"
			25,000 / 6,250 lbs.	16046	16580	A25	16021	Legs	--	14" - 18"

* Continued while supplies last

POWERRIDE™

30K GTW

30K HITCH

Product Details

- Tested and rated to 30,000 lbs. GTW / 7,500 lbs. vertical load per SAE J2638 (must be used with #16205 base rails
- Tough, professional-grade capacity and enhanced functionality
- Constructed with a cast steel main body for dependable strength
- Patented interlocking jaws for full kingpin contact and coupling security
- Premium, textured, dark grey teridium finish for lasting rust resistance
- Compatible with kingpin extension boxes, including common pivoting pin boxes (wedge required)
- 6" height adjustment for greater versatility versus 3" options
- No welding or fabrication required for installation
- Patent# 8,827,298

16320 - head with legs

Operational Features

Ergonomic, self-resetting handle for easier use from the side of the truck bed

Multi-directional, cast yoke head for a smooth ride and less strain on the truck

Three-position coupling indicator clearly shows coupling status

Design Features

Strategic grip points for ergonomic moving and handling

Integrated polyethylene plates for smooth operation, reduced wear and no grease

Fast, one-pin head removal makes moving easy with smaller, lighter pieces

POWER MEETS PERFORMANCE

POWERRIDE™ KIT OPTIONS

To learn more about puck systems see page 210

16321 - head with legs and 40K base rails

16594 - head with Ford puck legs

Industry-Standard Rail Options

Part #	Description	GTW / Vertical Load	Height Range
Long-Bed Options			
16320	Head with standard legs	30,000 / 7,500 lbs.	13" - 17"
16321	Head with standard legs (16320) and 40K base rails (16205)	30,000 / 7,500 lbs.	14" - 18"

For a guide in selecting the right 5th wheel for your customer's truck, see page 194

OEM Puck System Options

Make / Model	Style	Years	GTW / Vertical Load	Kit #	Head Only #	OEM Puck Leg #	Height Range
Chevrolet / GMC							
Silverado Sierra 2500 HD / 3500 HD	8' bed	20 - 24	30,000 / 7,500 lbs.	16592	16315	16030	13" - 17"
Ford							
F-250 / F-350 Super Duty	8' bed	11 - 23	30,000 / 7,500 lbs.	16594	16315	16032	13" - 17"
Ram							
2500 / 3500	8' bed	13 - 24	30,000 / 7,500 lbs.	16593	16315	16028	14" - 18"

Puck system products require a vehicle with a factory-installed 5th wheel prep package for installation

E-SERIES™

16K GTW

E16™ HITCH

Product Details

- Up to 16,000 lbs. GTW / 4,000 lbs. vertical load
- Pivots on dual axes for 10° of lateral movement
- Automatically locks for easy, secure coupling
- Operates using a single handle with few moving parts
- Features an anti-rattle skid plate to help reduce noise
- Offers four height adjustment positions to adapt to each unique truck bed
- Compatible with kingpin extension boxes, including common pivoting pin boxes (wedge #16991 required)
- Protected by a highly durable carbide black powder coat finish
- Tested for safety in accordance with SAE J2638

16115

Product Features

Pivots on dual axes for 10° of lateral movement

Features an anti-rattle skid plate to help reduce noise

Single-handle operation with auto-lock for easy, secure coupling

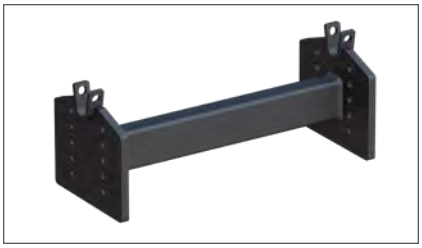

16505 head adapter allows CURT rollers to accept the 16515 E16 head (included in 16515, 16516 and 16616 kits

RELIABLE, BUDGET-FRIENDLY TOWING

E-SERIES™ INDUSTRY-STANDARD RAIL KIT OPTIONS

See page 208 for puck system mounting options

16115 - E16 head with standard legs

16116 - E16 head with standard legs and base rails

16511 - E16 head with S20 slider

16611 - E16 head with S20 slider and base rails

Kit #	Head Series	GTW / Vertical Load	Kit Includes				Height Range
			Hitch with Standard Legs #	Head with Adapter Plate #	Slider Only #	Base Rails #	
Long-Bed Options							
16115	E16	16,000 / 4,000 lbs.	16115	--	--	--	13" - 17"
16116	E16	16,000 / 4,000 lbs.	16115	--	--	16200	14" - 18"
Short-Bed Options							
16511	E16	16,000 / 4,000 lbs.	--	16515	16564	--	14" - 17"
16611	E16	16,000 / 4,000 lbs.	--	16515	16564	16204	15" - 18"

For a guide in selecting the mounting system for your customer's truck, see page 195

E-SERIES™ PUCK SYSTEM KIT OPTIONS

To learn more about puck systems see page 210

16061 - 2019 Chev / GMC legs with E16 head

16031 - Ford legs with E16 head

16071 - Nissan legs with E16 head

16697 - Chev / GMC roller adapter with E16 head & S20 slider

16674 - Ford roller with E16 head

16684 - Ram roller adapter with E16 head and R16 roller

Puck system products require a vehicle with a factory-installed 5th wheel prep package for installation

Make / Model	Bed	Years	GTW / Vertical Load	Kit#	5th Wheel Head		OEM Puck Products		Slider Only #	Height Range
					Head Only #	Series	Part #	Description		
Chevrolet / GMC										
Silverado / Sierra 2500 HD / 3500 HD	6.75'	16 - 19	16,000 / 4,000 lbs.	16697*	16515	E16	16023*	Roller adapter	16564	16" - 19"
	8'	20 - 24	16,000 / 4,000 lbs.	16097	16515	E16	16029	Legs	--	11-1/2" - 13-1/2"
		16 - 19	16,000 / 4,000 lbs.	16061	16515	E16	16025	Legs	--	11-1/2" - 13-1/2"
Ford										
F-250 F-350 Super Duty	6.75'	11 - 23	16,000 / 4,000 lbs.	16674*	16515	E16	16020*	Roller system	--	14" - 18"
	8'	11 - 23	16,000 / 4,000 lbs.	16031	16515	E16	16017	Legs	--	11-1/2" - 13-1/2"
Nissan										
Titan XD	8'	16 - 24	16,000 / 4,000 lbs.	16071	16515	E16	16026	Legs	--	11-1/2" - 13-1/2"
Ram										
2500 / 3500	6.75'	13 - 24	16,000 / 4,000 lbs.	16694*	16515	E16	16022*	Roller adapter	16564	16" - 19"
	8'	13 - 24	16,000 / 4,000 lbs.	16041	16515	E16	16021	Legs	--	12-1/2" - 15-1/2"

CURT
ROTA-FLEX
CURT
CROSSWING
20K

CURT
POWERRIDE
30K

PUCK SYSTEM COMPONENTS

FOR TRUCKS WITH OEM PREP PACKAGE

- Allows CURT 5th wheel hitches to fit an OEM puck system
- Quarter-turn anchors allow for quick installation and removal
- Anchors can be adjusted to eliminate chucking between the legs or roller and the puck system
- Tested for safety in accordance with SAE J2638
- Highly durable carbide black or teridium grey powder coat finish
- Capacity limited to lowest-rated towing component

16028
Ram legs

How to install OEM puck system products

Step 1 - Drop OEM-compatible product into the truck bed puck system

Step 2 - Close the anchor levers to lock the 5th wheel into place

Step 3 - Secure levers with attached safety pins and you're ready to hitch up your trailer

OEM PUCK SYSTEM BASE RAIL ADAPTERS

- Convert the truck's puck system to industry-standard 5th wheel base rails
- No hitch leg reconfiguring or disassembly required

Easily transfer existing hitch from previous truck to new puck-equipped truck

Industry-standard rails accept most 5th wheel legs and rollers

16027 base rail adapter shown with A20 head and S20 slider (not included)

Make / Model	Style	Years	GTW	Adds Height	Part #
Chevrolet / GMC					
Silverado / Sierra 2500 HD / 3500 HD	With 5th wheel prep package	20 - 24	25,000 lbs.	2-1/4"	16027
		16 - 19	25,000 lbs.	2-1/4"	16050
Ford					
F-250 / F-350 Super Duty	With 5th wheel prep package	11 - 23	25,000 lbs.	2-1/4"	16027
Ram					
2500 / 3500	With 5th wheel prep package	13 - 24	25,000 lbs.	2-3/4"	16042

STREAMLINED 5TH WHEEL INSTALLATION

OEM PUCK SYSTEM 5TH WHEEL HITCH LEGS & ROLLER PRODUCTS

See our kitted options on pages 203, 205 and 208

16030 Chev / GMC legs

16020 Ford roller system

16023 Chev / GMC roller adapter

Puck system products require a vehicle with a factory installed 5th wheel prep package for installation

Make / Model	Style	Years	GTW	OEM Puck Products		
				Part #	Description	Finish
Chevrolet / GMC						
Silverado / Sierra 2500 HD / 3500 HD	6.75' bed with 5th wheel prep pkg	16 - 19	20,000 lbs.	16023*	Roller adapter	Carbide black
	8' bed with 5th wheel prep pkg	20 - 24	30,000 lbs.	16024	Legs	Carbide black
			30,000 lbs.	16030	Legs	Teridium grey
			25,000 lbs.	16029	Legs	Carbide black
		16 - 19	25,000 lbs.	16025	Legs	Carbide black
Ford						
F-250 / F-350 Super Duty	6.75' bed with 5th wheel prep pkg	11 - 23	24,000 lbs.	16020*	Roller system (built-in roller)	Carbide black
	8' bed with 5th wheel prep pkg	11 - 23	24,000 lbs.	16017	Legs	Carbide black
			30,000 lbs.	16032	Legs	Teridium grey
Nissan						
Titan XD	8' bed with 5th wheel prep pkg	16 - 24	20,000 lbs.	16026	Legs	Carbide black
Ram						
2500 / 3500	6.75' bed with 5th wheel prep pkg	13 - 24	24,000 lbs.	16022*	Roller adapter	Carbide black
	8' bed with 5th wheel prep pkg	13 - 24	25,000 lbs.	16021	Legs	Carbide black
			30,000 lbs.	16028	Legs	Teridium grey

* Continued while supplies last

QUIET, SOLID DESIGN VIRTUALLY ELIMINATES CHUCKING

S-SERIES™

20K GTW S20™ SLIDER

25K GTW S25™ SLIDER

See our kitted options on pages 202 - 208

Product Details

- Up to 25,000 lbs. GTW / 6,250 lbs. vertical load
- Smooth sliding between positions with no binding
- Automatically latches in both directions so you only have to exit the truck once
- Easy-to-reach lever arm for ergonomic operation
- Lever lift motion for user-friendly functionality vs. traditional pull-out style
- Tested for safety in accordance with SAE J2638
- Mount to all industry-standard base rails
- Protected by a highly durable carbide powder coat finish

16574

Greater maneuverability

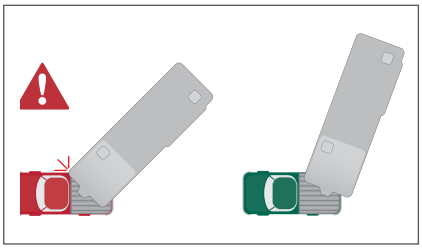

Provides 12" of displacement for the coupling point, adding turning clearance for short-bed trucks and avoiding trailer obstruction

Added convenience

Handle automatically locks into place when you drive forward, eliminating the need to exit the truck multiple times during hookup

Factory assembled

Ships fully assembled for fast, easy installation onto any industry-standard rails

Part #	GTW	Slider Series	Finish
16564	20,000 lbs.	S20	Carbide black
16574	25,000 lbs.	S25	Carbide black

PERMANENT RAIL SYSTEMS

CUSTOM UNDER-BED BRACKETS

Custom brackets provide a set of permanent 5th wheel base rails in the truck bed. If your customer prefers removable rails for no obstructions in the truck bed, **see page 216 for our gooseneck adapter options.**

Custom brackets

- Designed to be used in combination with industry-standard base rails (see application guide for part numbers)
- Vehicle-specific applications reduce or eliminate frame drilling, cutting installation time in half
- Protected by a rust-resistant liquid A-coat
- Includes mounting hardware
- Tested according to SAE J2638 specifications

16412 brackets shown with 16204 base rails

Semi-custom brackets

- Designed to be used in combination with CURT universal brackets and / or base rails (see application guide for part numbers)
- All semi-custom brackets require drilling to be installed

Step 1 - Pick vehicle-specific brackets starting on page 214

Step 2 - Select the base rails by finish preference

Step 3 - Start on page 194 to select a 5th wheel hitch

UNIVERSAL UNDER-BED BRACKETS & INDUSTRY-STANDARD BASE RAILS

Weight capacities limited to the lowest rated towing component

- **Industry-exclusive 40K option**
- Intended for vehicle applications not covered by CURT custom brackets
- Compatible with CURT and most competitive 5th wheel hitches, rollers and gooseneck adapters
- All universal brackets require drilling or welding to be installed
- Tested according to SAE J2638 specifications

16205

16200

16150

Kit #	Base Rails Only #	Brackets & Hardware #	Capacity	Finish	Description
Base Rails & Brackets					
16150	--	--	25,000 lbs.	Gloss black	Two rails, 4-bolt
16100	16104	16101	25,000 lbs.	Gloss black	Two rails, 10-bolt
16200	16204	16101	25,000 lbs.	Carbide black	Two rails, 10-bolt
--	16205	--	40,000 lbs.	Teridium grey	Two rails, 10-bolt
Replacement Hardware					
16111	Installation hardware kit				
16103	Wheel bolts, qty 8 (for installing new brackets Available in 10-pack #16103010 (10 sets of eight bolts)				

40K RAILS FULLY TESTED TO SAE J2638

APPLICATION GUIDE

Make / Model	Style	Years	Bracket Type	Bracket #	Drilling	Base Rails		
						40K Teridium#	25K Carbide #	25K Gloss #
Chevrolet								
Silverado 1500	Excl. 5.5' bed	19 - 24	Custom	16469	No	--	16204	16104
	--	07 - 18	Custom	16400	No	--	16204	16104
		99 - 06	Custom	16418	Yes	--	16204	16104
Silverado 1500 Classic	--	07 - 07	Custom	16418	Yes	--	16204	16104
Silverado 1500 LD	--	19 - 19	Custom	16400	No	--	16204	16104
Silverado 1500 LTD	Excl. 5.5' bed	22 - 22	Custom	16469	No	--	16204	16104
Silverado 2500	Excl. Cab & Chassis	99 - 04	Custom	16418	Yes	--	16204	16104
Silverado 2500 HD	--	20 - 24	Custom	16429[1]	No	16205	16204	16104
		11 - 19	Custom	16411	No	--	16204	16104
	Excl. Cab & Chassis	01 - 10	Custom	16418	Yes	--	16204	16104
Silverado 2500 HD Classic	Excl. Cab & Chassis	07 - 07	Custom	16418	Yes	--	16204	16104
Silverado 3500	Excl. Cab & Chassis	01 - 06	Custom	16418	Yes	--	16204	16104
Silverado 3500 Classic	Excl. Cab & Chassis	07 - 07	Custom	16418	Yes	--	16204	16104
Silverado 3500 HD	Excl. Cab & Chassis	20 - 24	Custom	16429[1]	No	16205	16204	16104
		11 - 19	Custom	16411	No		16204	16104
		07 - 10	Custom	16418	Yes		16204	16104
Dodge								
Ram 1500	--	09 - 10	Semi-Cust.	16306	Yes	--	16204	16104
	Extended crew cab	06 - 08	Custom	16420	No	--	16204	16104
	Excl. extended crew cab	02 - 08	Custom	16419	No	--	16204	16104
	--	02 - 08	Semi-Cust.	16303	Yes	--	16200	16100
Ram 2500 / 3500	Excl. Cab & Chassis	03 - 10	Custom	16420	No	--	16204	16104
			Semi-Cust.	16301	Yes	--	16200	16100

[1] Brackets rated up to 30,000 lbs. when used with #16205 (40K) base rails

Applications continued on the following page

Make / Model	Style	Years	Bracket Type	Bracket #	Drilling	Base Rails		
						40K Teridium#	25K Carbide #	25K Gloss #
Ford								
F-150	Excl. Lightning or Police Responder	22 - 23	Custom	16911	No	--	16204	16104
	Excl. Police Responder	15 - 21	Custom	16911	No	--	16204	16104
	Excl. 5.5' bed	04 - 14	Custom	16441	No	--	16204	16104
	--	04 - 11	Semi-Cust.	16300	Yes	--	16204	16104
		97 - 03	Custom	16437	No	--	16204	16104
F-150 Heritage	--	04 - 04	Custom	16437	No	--	16204	16104
F-250	--	97 - 99	Custom	16437	No	--	16204	16104
F-250 / F-350 Super Duty	Excl. Cab & Chassis	17 - 24	Semi-Cust.	16432[1]	No	16205	16204	16104
		11 - 16	Custom	16424	No	--	16204	16104
		05 - 10	Custom	16448	Yes	--	16204	16104
		99 - 04	Custom	16443	Yes	--	16204	16104
F-450 Super Duty	Excl. Cab & Chassis	17 - 24	Semi-Cust.	16432[1]	No	16205	16204	16104
		11 - 16	Custom	16424	No	--	16204	16104
		08 - 10	Custom	16448	Yes	--	16204	16104
GMC								
Sierra 1500	Excl. 5.5' bed	19 - 24	Custom	16469	No	--	16204	16104
	Excl. Denali	07 - 18	Custom	16400	No	--	16204	16104
	--	99 - 06	Custom	16418	Yes	--	16204	16104
Sierra 1500 Classic	--	07 - 07	Custom	16418	Yes	--	16204	16104
Sierra 1500 Limited	Excl. 5.5' bed	22 - 22	Custom	16469	No	--	16204	16104
	--	19 - 19	Custom	16400	No	--	16204	16104
Sierra 2500	Excl. Cab & Chassis	99 - 04	Custom	16418	Yes	--	16204	16104
Sierra 2500 HD	--	20 - 24	Custom	16429[1]	No	16205	16204	16104
		11 - 19	Custom	16411	No	--	16204	16104
	Excl. Cab & Chassis	01 - 10	Custom	16418	Yes	--	16204	16104
Sierra 2500 HD Classic	Excl. Cab & Chassis	07 - 07	Custom	16418	Yes	--	16204	16104
Sierra 3500	Excl. Cab & Chassis	01 - 06	Custom	16418	Yes	--	16204	16104
Sierra 3500 Classic	Excl. Cab & Chassis	07 - 07	Custom	16418	Yes	--	16204	16104
Sierra 3500 HD	Excl. Cab & Chassis	20 - 24	Custom	16429[1]	No	16205	16204	16104
		11 - 19	Custom	16411	No	--	16204	16104
		07 - 10	Custom	16418	Yes	--	16204	16104
Nissan								
Titan	--	04 - 24	Custom	16470	Yes	--	16204	16104
Ram								
1500	Excl. TRX or multifunction tailgate	19 - 24	Custom	16307	No	--	16204	16104
	With factory air suspension	13 - 17	Custom	16444	Yes	--	16204	16104
	Coil springs, excl. Limited	11 - 18	Semi-Cust.	16306	Yes	--	16204	16104
1500 Classic	Coil springs	19 - 23	Semi-Cust.	16306	Yes	--	16204	16104
2500	Excl. 5th wheel prep pkg	14 - 24	Custom	16427	No	--	16204	16104
	--	13 - 13	Custom	16430[1]	Yes	16205	16204	16104
		11 - 12	Custom	16420	No	--	16204	16104
3500	Excl. 5th wheel prep pkg	13 - 24	Custom	16430[1]	Yes	16205	16204	16104
	Excl. Cab & Chassis	11 - 12	Custom	16420	No	--	16204	16104
Toyota								
Tundra	6.5' bed, excl. extended crew cab	07 - 21	Custom	16468	Yes	--	16204	16104
	Excl. extended crew cab	07 - 20	Semi-Cust.	16304	Yes	--	16200	16100

[1] Brackets rated up to 30,000 lbs. when used with #16205 (40K) base rails

GOOSENECK TO 5TH WHEEL

20K GTW

X5™ GOOSENECK TO 5TH WHEEL ADAPTER PLATES

See page 199 for CrossWing™ single-point

The X5 adapter plate allows a gooseneck hitch to become a mounting platform for a 5th wheel hitch. The X5 shank simply drops into the gooseneck ball hole and instantly provides a set of industry-standard 5th wheel base rails.

See the table below for gooseneck hitch compatibility.

Product Details

- Converts a gooseneck hitch into a set of standard 5th wheel base rails
- No assembly or tools required – just drop it in, lock it and go
- For use with CURT and competitive 5th wheels up to 20,000 lbs.
- Capacity limited to lowest-rated towing component
- Accepts any standard CURT 5th wheel legs or roller (excludes OEM puck system products)
- Durable carbide black powder coat finish
- Co-cured in a rust-resistant liquid A-coat
- **Not compatible with OEM-style gooseneck hitches or turret-style pin boxes, such as Sidewinder™ or Turning Point™**
  (Trademark of First Brands Group™)

Step 1 - Pick a gooseneck hitch. If your customer has a gooseneck hitch, see step 2

Step 2 - Select the corresponding X5 adapter plate to match the gooseneck

Step 3 - See page 194 for our 5th wheel hitch selection guide

16210 - Fits CURT original Double Lock

16220 - Fits CURT Double Lock EZr

16310 - Fits B&W Turnoverball

Part #	Fits	Capacity	Shank Style
16210	CURT Double Lock 60607 and 60615	20,000 lbs.	Round shank
16220	CURT Double Lock EZr 60611 and 60619	20,000 lbs.	Round shank
16310	B&W Turnoverball® (excl. shallow models; shank hole is 2-1/4" from plate surface)	20,000 lbs.	Square shank

See page 252 for original Double Lock gooseneck hitches. See page 250 for Double Lock EZr gooseneck hitches

LIPPERT

5TH WHEEL ACCESSORIES

5TH WHEEL SAFETY CHAIN LOOPS

See page 200 for CrossWing™ compatibility

- Easy to install with provided hardware
- Wide openings accept heavy-duty hooks and chains
- Durable carbide black powder coat finish

Provides a solid attachment point for 5th wheel safety chains in your truck bed

Universal design fits all industry-standard 5th wheel base rails

16615

16000

16612

16614

16613

Part #	GTW	For Use With	Includes	Finish
16612	20,000 lbs.	CrossWing industry-standard rail 5th wheel	Safety chain loops and CrossWing connection plate	Carbide black
16614	20,000 lbs.	CrossWing single-point 5th wheel	Safety chain loop plate and CrossWing connection plate	Carbide black
16613	20,000 lbs.	CrossWing industry-standard rail or single-point 5th wheel	CrossWing connection plate	Carbide black
16600	20,000 lbs.	All industry-standard base rails	Safety chain loops	Carbide black
16615	20,000 lbs.	CrossWing single-point 5th wheel	Safety chain loop plate	Carbide black

5TH WHEEL RAIL SOUND-DAMPENING PADS

- Helps eliminate clanking and rattling
- Compatible with all industry-standard 5th wheel legs, sliders and base rails (excluding OEM puck system products)
- Tough neoprene rubber

Bulk #	Pkg #	Quantity
16900	16901	4

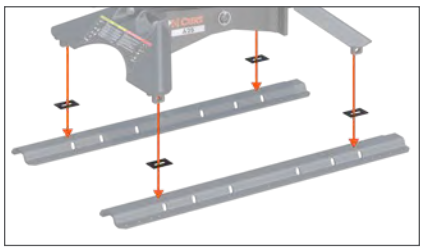

Place between a 5th wheel hitch and base rails to dampen sound

16901

16900

5TH WHEEL HITCH LOCK

- Extra-long 1/2" diameter pin fits all industry-standard base rails
- Rust-free aluminum housing with a durable black powder coat finish
- Weather-resistant dust cap helps prevent internal corrosion
- Easy-to-access, 1/8-turn lock activation
- Includes two keys for added convenience

23256

Key slot angled upward for easier ergonomic access

Locks a 5th wheel hitch into the rails, taking the place of a pin & clip

Installs tight against the lip of the base rail for enhanced security

Part #	Pin Diameter	Finish
23256	1/2"	Black powder-coated aluminum

5TH WHEEL LUBE PLATES

- Reduces normal wear and tear when towing
- Eliminates messy grease deposits that trap dirt on hitch head plate
- 12" plate features self-cleaning grooves to maintain good lubrication
- Constructed from tough polyethylene

16722

16721

Adds a buffer between 5th wheel head plate and kingpin box

Fits any standard kingpin, simply snap it into place before coupling

16721025

Part #	25-Pack Tray #	Description
16721	16721025	10" 5th wheel lube plate
16722	--	12" slotted 5th wheel lube plate

KINGPIN LOCK

- Built with an aluminum body for corrosion resistance
- Two keys included for added convenience
- Space-saving, full-color retail packaging

Locks on to 5th wheel kingpin to deter theft of 5th wheel trailer

Universal design fits most 5th wheel trailer kingpins

23255

Part #	Description	Finish
23255	5th wheel trailer kingpin lock	Chrome-plated steel and powder-coated aluminum

5TH WHEEL WEDGES

A rotating 5th wheel pin box creates an alternative pivot point for the 5th wheel connection, providing the 5th wheel trailer with a wider turn radius. However, because of this secondary pivot point, the primary pivot point must be fixed to keep the trailer from wandering. A 5th wheel wedge bolts onto the pin box, locks up the kingpin and keeps it from swiveling.

- Allows CURT 5th wheel hitches to be used with rotating pin boxes, such as Sidewinder™ and Turning Point®
- Bolts on behind the kingpin of the pin box to restrict movement between 5th wheel hitch and pin box
- Durable carbide black powder coat finish
- Made in USA (may include imported hardware)

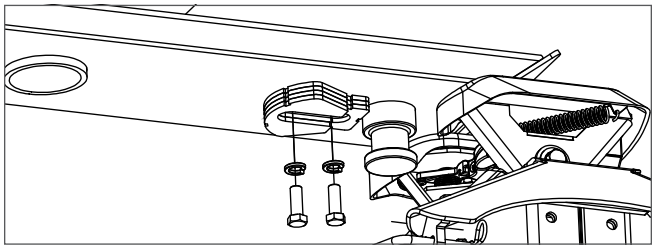

Restricts movement between the 5th wheel hitch and the rotating pin box, such as Sidewinder or Turning Point

16991

16992

16994

19288

19283

CURT 5th Wheel Hitch Model	Fits Rotating Pin Box Models	Part #
E-Series (page 206)	Turning Point (all) and 5th Airborne Sidewinder models excluding #68220	16991
A-Series (page 201)	Turning Point (all) and 5th Airborne Sidewinder models excluding #68220	16992
	Reese Sidewinder #68220 only	16994
CrossWing (page 198)	Turning Point (all) and 5th Airborne Sidewinder models excluding #68220	19283
	Reese Sidewinder #68220 only	19288

5TH WHEEL ELECTRICAL

CUSTOM WIRING EXTENSION HARNESSES

- Routes a 7-way RV blade socket into truck bed while retaining use of rear socket
- Simple plug-and-play design eliminates the need for cutting or splicing
- Allows for easy connection of gooseneck wiring
- Requires 2-1/8" hole saw for installation
- Neoprene well nuts isolate steel bolts from aluminum surfaces (select models)
- **See page 156 for more information**

56070 (7') / 56000 (10')

56071 (7') / 56001 (10')

Right-angle plug for easy installation

7' routes socket into rear of the truck bed

10' routes socket closer to truck cab

7-WAY RV BLADE EXTENSION HARNESS

- Routes existing 7-way RV blade socket into full-size pickup truck bed (7' length)
- Universal size fits any 7-way RV blade socket
- Allows for easy connection of gooseneck wiring
- **See page 158 for more information**

56080

REPLACEMENT 7-WAY RV BLADE HARNESSES

- Replaces the trailer-end plug of any 7-way harness
- Wires protected by heavy-duty, weather-resistant cable
- Cold-weather harnesses feature soft thermoplastic elastomer casing to remain flexible in cold temperatures (temperature rating from -40˚F up to 221˚F)
- **See page 159 for more information**

56602

56612

BRAKE CONTROLLERS

For a full list of benefits see pages 138 - 141

- Easily calibrated for all towing needs
- Proportional and time-delay units available
- Compatible with electric over hydraulic couplers

51200

Echo® in-line
Hidden under vehicle
Bluetooth-enabled
Smartphone-ready

51190

Echo® under-dash
Hidden under dash
Bluetooth-enabled
Smartphone-ready

51180

Echo® mobile
Portable design
Bluetooth-enabled
Smartphone-ready

51170

Spectrum™
Integrated OE look
Hidden main body
Tri-color LED display

51160

Assure™
Full text readout
Tri-axis sensitivity
Adjustable screen

NEW

51146

TriFlex™ NEXT
Tri-axis sensitivity
Auto adjustment
Digital display

NEW

51126

Discovery™ NEXT
Time-delay
Adjustable output
Digital display

NEW

51116

Venturer™ NEXT
Time-delay
Adjustable output
Ramp-up LED display

Dynamic power adjustment

Applies to Echo, Spectrum, Assure and TriFlex

4.0 ▸ 3.2 Automatic power reduction for incline

4.0 ▸ 5.3 Automatic power increase for decline

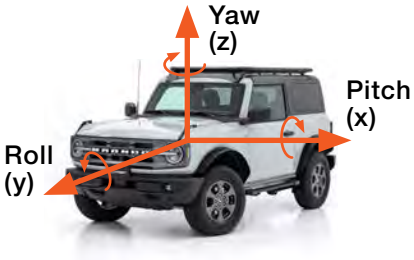

Tri-axis circuit detects inertia on three planes for greater sensitivity over dual-axis models

Note: Values represented are for illustration only. The actual preset and adaptive values may differ from those shown here.

Name	Pkg #	Axles	Brakes	Activation Method	Display	Mount Angle	Sleep Mode	Electric Over Hydraulic	Warranty
Echo in-line	51200	1 - 4	2 - 8	Proportional	Phone app	Any	Yes	Yes	Ltd lifetime
Echo under-dash	51190	1 - 4	2 - 8	Proportional	Phone app	Any	Yes	Yes	Ltd lifetime
Echo mobile	51180	1 - 2	2 - 4	Proportional	Phone app	Any	N/A	Yes	Ltd lifetime
Spectrum	51170	1 - 4	2 - 8	Proportional	Tri-color LED	Any	N/A	Yes	Ltd lifetime
Assure	51160	1 - 4	2 - 8	Proportional	OLED screen	-20° to +70°	Yes	Yes	Ltd lifetime
TriFlex NEXT	51146 N	1 - 4	2 - 8	Proportional	LED digital	Any	Yes	Yes	Ltd lifetime
Discovery NEXT	51126 N	1 - 4	2 - 8	Time-delay	LED digital	Any	Yes	Yes	Ltd lifetime
Venturer NEXT	51116 N	1 - 3	2 - 6	Time-delay	LED digital	Any	Yes	Yes	Ltd lifetime

REPLACEMENT PARTS

A-SERIES™ 5TH WHEEL REPLACEMENT PARTS

Fig #	Part #	Description	Fits
1	16520	A16 head only	16120
1	16540	A20 head only	16140
1	16580	A25 head only	16180
1	16590	A30 head only	16190
2	19211	A16 yoke support pin	16120
2	19213	A20 yoke support pin	16140
2	19214	A25 & A30 yoke support pin	16180, 16190
3	16920	A16 leg kit and hardware	16120
3	16906	A20 leg kit and hardware	16140
3	16907	A25 & A30 leg kit and hardware	16180, 16190
4	16902	Rail pins & clips, qty 4	All
5	19287	Torsion insert	All
6	19212	Handle assembly: - Release handle, qty 1 - Handle grip, qty 1 - Handle lock bar, qty 1 - M8 bolt head cap screw, qty 2 - Latch spring, qty 1 - M8 lock washer, qty 2	All

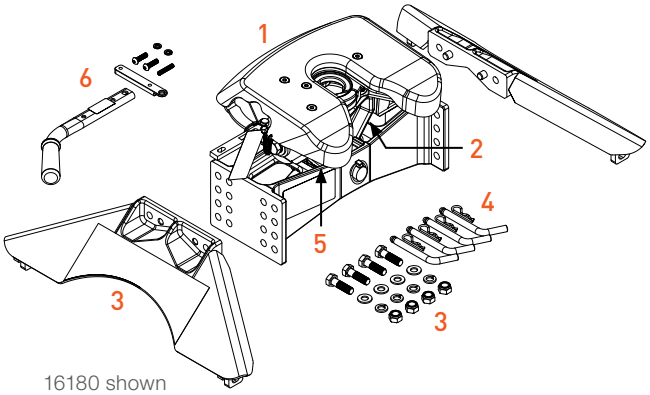

16180 shown

E-SERIES™ 5TH WHEEL REPLACEMENT PARTS

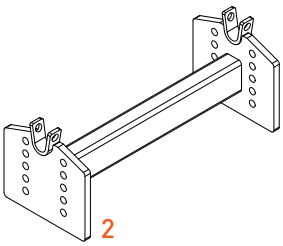

Fig #	Part #	Description	Fits
1	16515	E16 head with 16505 adapter	16115
2	16505	Head adapter	16115
3	19226	Head pinning kit: - Pin, qty 2 - Clip, qty 2	16115
4	19227	Head spring kit - Slide lock spring, qty 1 - Slide spring, qty 1	16115
5	19228	Handle assembly: - Handle, qty 1 - Handle grip, qty 1 - M6 hex head cap screw, qty 1 - M6 nylock nut, qty 1	16115
6	16903	E16 leg kit and hardware	16115
7	16902	Rail pins & clips, qty 4	16115

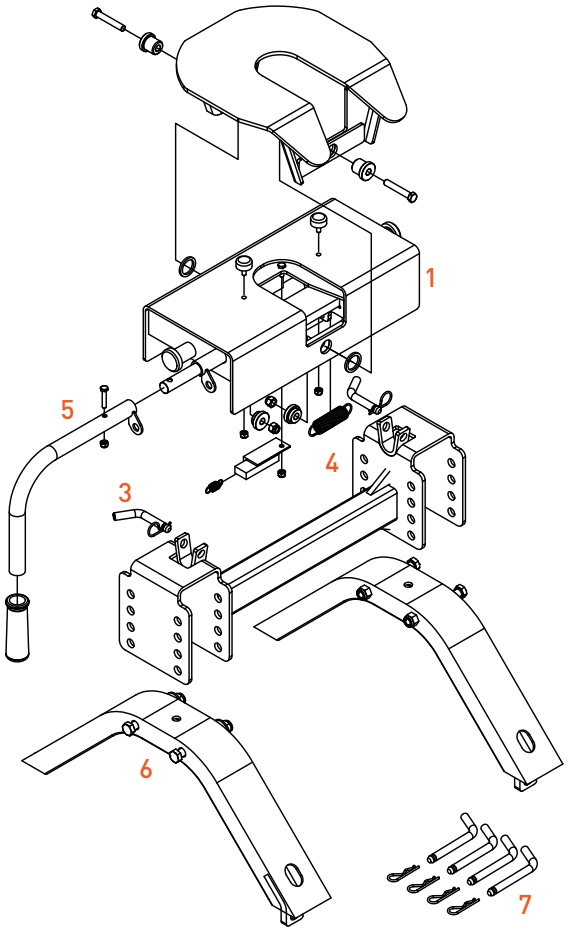

CROSSWING™ 5TH WHEEL REPLACEMENT PARTS

Fig #	Part #	Description	Fits
1	19295	Kingpin coupling attachment and installation hardware: - Upper weldment, qty 1 - 1/2" hex bolts, qty 2 - 1/2" nylock nuts, qty 2	16600 16051 16602
2	19286	Replacement hardware: - M20 hex bolt, qty 1 - Bushing, qty 1 - M20 flat washer, qty 1 - M20 nylock nut, qty 1 - 1/2" hex bolts, qty 2 - 1/2" nylock nuts, qty 2	16600 16051 16602
3	19273	Body grip handle kit - Handle grip inner, qty 2 - Handle grip outer, qty 2 - M4 button head bolts, qty 4 - M4 lock washers, qty 4	16600 16051 16602
4	19279	Handle grip kit - Handle, qty 1 - Bearing and spring, qty 1 - Shoulder screw, qty 1 - Wire-lock pin, qty 1 - 16mm key rings, qty 2 - Twisted link chain, qty 1	16600 16051 16602
5	19280	Coupler tube kit - Coupler tube, qty 1 - M20 x 130mm carriage bolt, qty 1 - M20 x 90mm carriage bolt, qty 1 - M20 flange nut, qty 1 - M20 jam nut, qty 1 - Flat washer, qty 1 - M14 hex bolts, qty 2 - M14 hex nuts, qty 2 - Lynch pins, qty 2 - Pin, qty 2	16051 16602
6	19281	Coupler tube hardware - M20 x 130mm carriage bolt, qty 1 - M20 x 90mm carriage bolt, qty 1 - M20 flange nut, qty 1 - M20 jam nut, qty 1 - Flat washer, qty 1	16051 16602
7	19282	Skid pads, qty 2	16051 16040

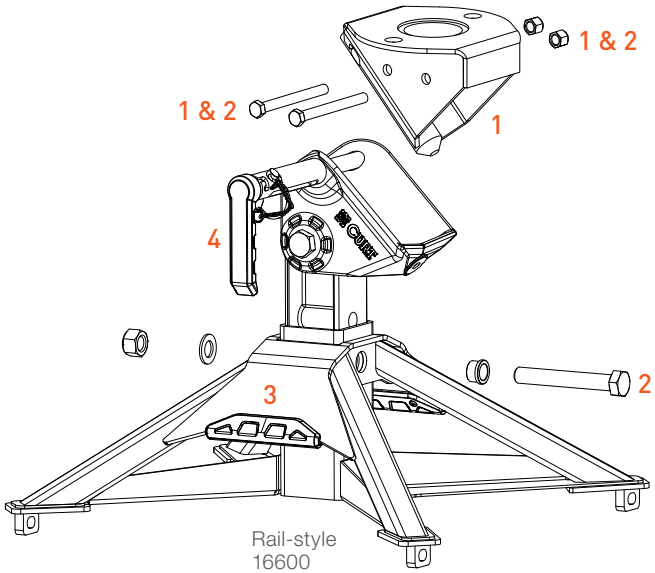

Rail-style
16600

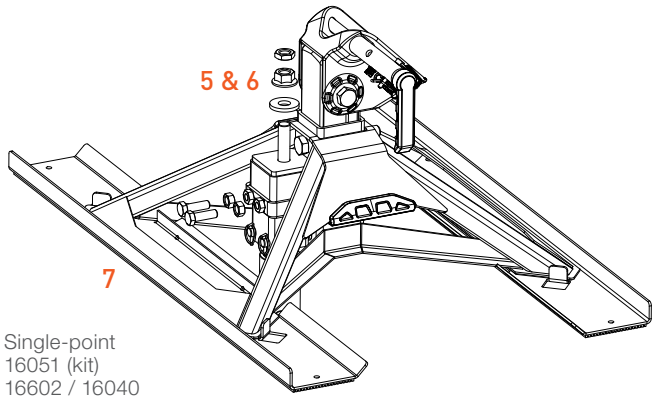

Single-point
16051 (kit)
16602 / 16040

POWERRIDE™ 5TH WHEEL REPLACEMENT PARTS

Fig #	Part #	Description	Fits
1	16315	Head only	All
2	19269	Lube plates, qty 2	All
3	16908	Leg kit and hardware	All

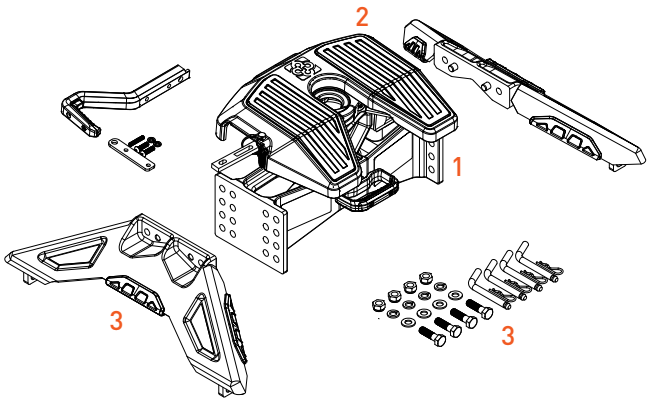

Q-SERIES™ 5TH WHEEL REPLACEMENT PARTS

Q-Series™ hitches have been retired.

For the same great features and even more, please refer to our A-Series on page 201.

Fig #	Part #	Description	Fits
--	19223	Grease zerk, qty 3 (not pictured)	All
1	19215	Handle grip	All
2	19216	Handle with indicators	All
3	19224	Handle lock assembly: - 140mm chain, qty 1 - Lynch pin, qty 1 - Handle flip lock, qty 1 - M6 screw, qty 2 - M6 nylock nut, qty 1 - 16mm key ring, qty 2	All
4	19221	Head pinning kit: - Retainer cap pin, qty 2 - Pin grip, qty 2 - Pin clip, qty 2 - Grommet, thick, qty 4 - Grommet, thin, qty 2	All
5	19222	16125 service kit 9 & 10: - Anti-orbit pad, qty 1 - Molded anti-orbit pad, qty 2 - M10 carriage bolt, qty 2 - M10 nylock nut, qty 2 - M10 button head bolt, qty 2 - Square retaining washer, qty 2	All
6	16530	Q20 head only	16130
7	16904	Q20 leg kit and hardware	16130
8	19225	Q20 leg spacer plates, qty 4	16130

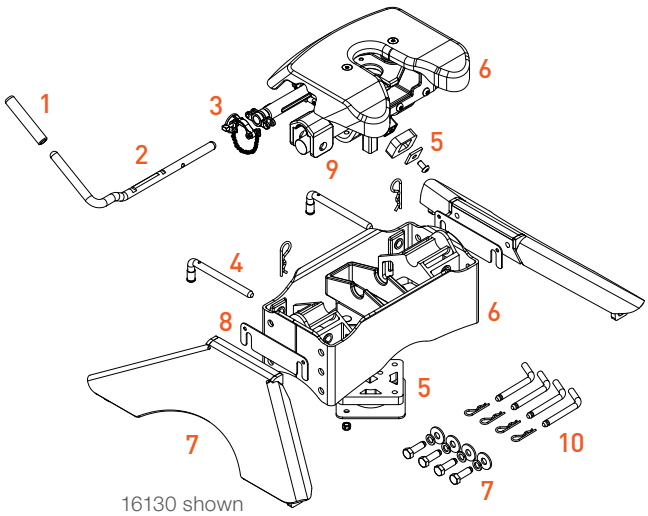

Fig #	Part #	Description	Fits
6	16545	Q24 head only	16245
7	16913	Q24 leg kit and hardware	16245
7	16963	Q25 leg kit and hardware	16265
9	16914	Bearing shaft top clips, qty 2	All
10	16902	Rail pins & clips, qty 4	All

OEM PUCK SYSTEM REPLACEMENT PARTS

Part #	Description	Fits
19201	Handles, qty 4	16017, 16020, 16029
19205	Handles, qty 4	16021
19206	Handles, qty 4	16022
19207	Handles, qty 4	16023
19209	Handles, qty 4	16025
19202	Puck kit: - Locking T-bolts, qty 4 - Pucks, qty 4 - Castle nuts, qty 4 - Cotter pins, qty 4 - Washers, qty 4	16017, 16020, 16029
19203	Puck kit (rear of bed): - Locking T-bolts, qty 2 (large) - Pucks, qty 2 - Castle nuts, qty 2 - Cotter pins, qty 4	16021, 16022

Part #	Description	Fits
19204	Puck kit (front of bed): - Locking T-bolts, qty 2 (small) - Pucks, qty 2 - Castle nuts, qty 2 - Cotter pins, qty 4	16021, 16022
19208	Puck kit: - Locking T-bolts, qty 4 - Pucks, qty 4 - Castle nuts, qty 4 - Cotter pins, qty 4 - Washers, qty 4	16023
19210	Puck kit: - Locking T-bolts, qty 4 - Pucks, qty 4 - Castle nuts, qty 4 - Cotter pins, qty 4 - Washers, qty 4	16025

S-SERIES™ SLIDER REPLACEMENT PARTS

Fig #	Part #	Description	Fits
1	19102	Rail kit: - Half-round rails, qty 2 - M6 button head screws, qty 4 - M6 flat head screws, qty 4 - Lock washers, qty 4	All
2	19103	Rubber bumpers, qty 4	All
3	19104	Roller kit: - Roller sleeve, qty 1 - Roller, qty 1 - M16 Hex bolt, qty 1 - M16 nylock nut, qty 1	All
4	19105	Pin plate kit: - Pin plates, qty 2 - M14 hex bolt, qty 4 - M14 flat washers, qty 4 - M14 nylock nuts, qty 4	16574
5	19106	Wire-lock pin, qty 1	All
6	19107	Handle kit: - Locking handle, qty 1 - M6 shoulder bolt, qty 1 - M6 nylock nut, qty 1 - M8 hex bolt, qty 1 - M8 flat washers, qty 2 - M8 nylock nut, qty 1	All

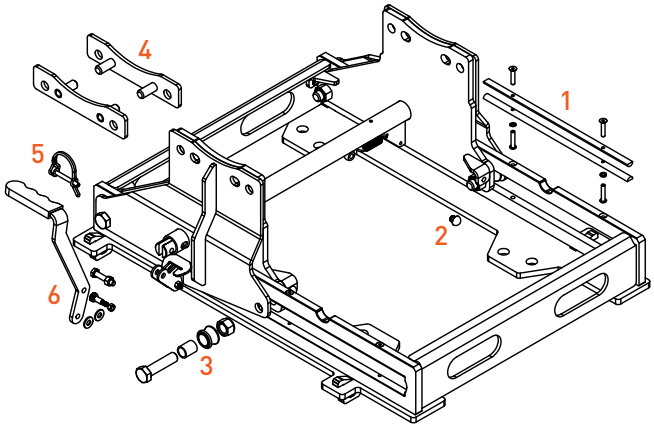

R-SERIES™ ROLLER REPLACEMENT PARTS

R-Series™ rollers have been retired.

For the same great features and even more, please refer to our S-Series on page 212.

Fig #	Part #	Description	Fits
1	19217	Roller wheel kit: - Roller wheel, qty 1 - M8 shoulder bolt, qty 1	All
2	19218	Head mounting hardware: - M14 hex bolt, qty 4 - M14 flat washer, qty 4 - M14 lock washer, qty 4 - M14 nylock nut, qty 4	All
3	19219	R16 handle assembly: - Handle, qty 1 - Handle grip, qty 1 - M6 hex bolt, qty 1 - M6 nylock nut, qty 1	16560
4	19220	R20 & R24 handle assembly: - Handle, qty 1 - Handle grip, qty 1 - M6 hex bolt, qty 1 - M6 nylock nut, qty 1	16550, 16570
5	16902	Rail pins & clips, qty 4	All

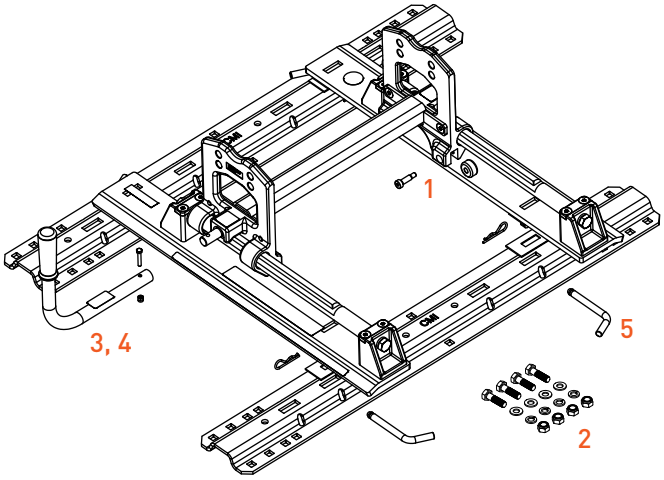

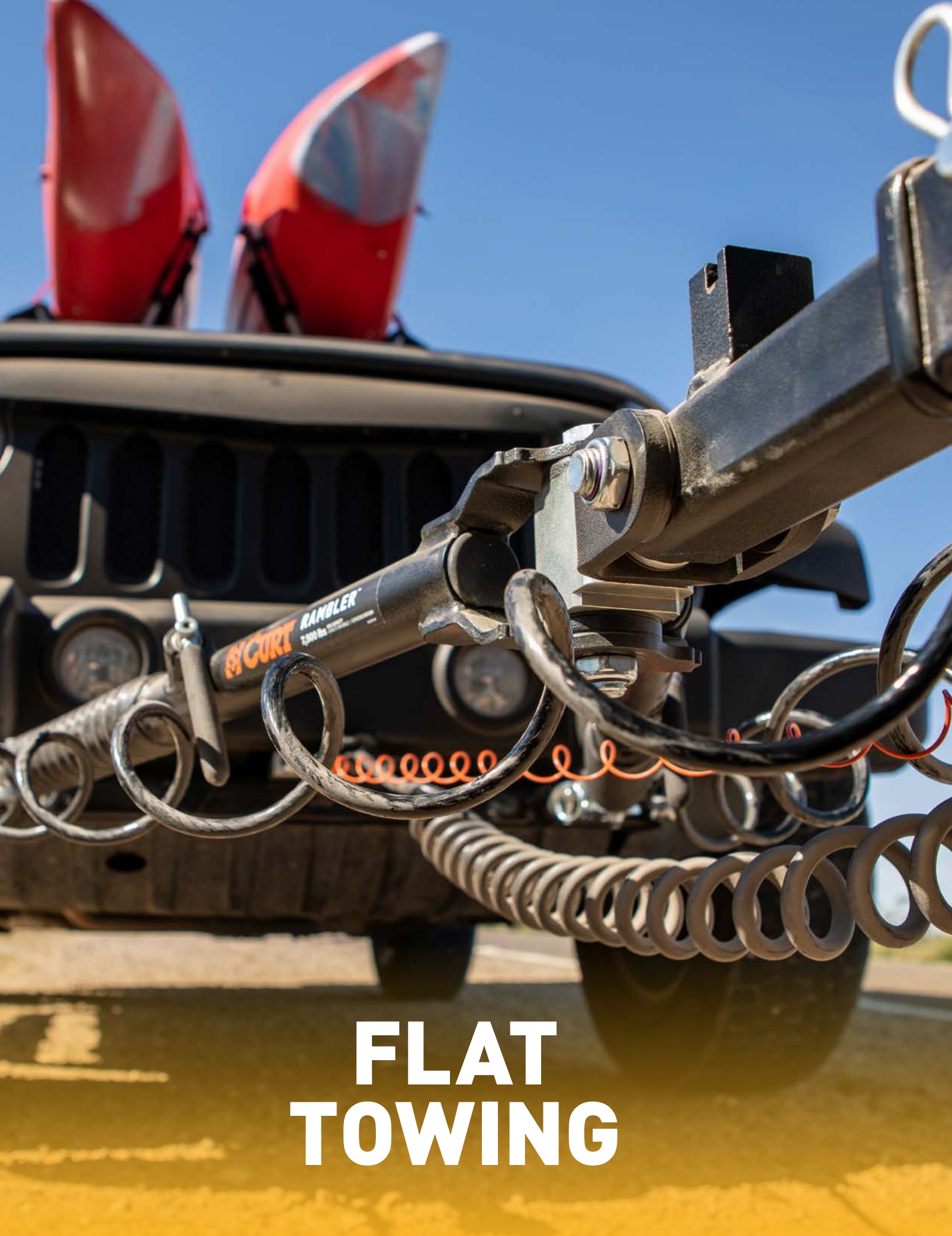

FLAT TOWING

FEATURED PRODUCTS

Scan QR code for current applications or visit curtmfg.com

Rambler™ tow bar

This RV tow bar features non-binding latches for easy release and weighs less than 40 lbs. with a tow rating of up to 7.5k lbs.

Dinghy towing adapters

Specifically designed for flat towing applications, we've added several coiled adapters, providing a reliable connection to the RV.

Rambler™ lock set

Get enhanced security for your vehicle and peace of mind when on the road with this keyed-alike lock set.

PRODUCT INDEX

229 Rambler™ Tow Bar

230 Tow Bar Base Plates

233 Rambler™ Accessories

234 Universal Tow Bars

235 Flat Towing Accessories

236 Dinghy Towing Adapters

237 RV Harnesses

TRUST THE TOWING EXPERTS.

CURT HAS YOU COVERED

Years of knowledge and experience have culminated to produce our line of tested, proven flat towing products, including RV tow bars, base plates, wiring and accessories. We test our products to rigorous standards because successful towing starts with safety.

RV trailer hitches available, see page 21

Why CURT Tow Bars

Design expertise

Years of engineering experience have been poured into the design of our tow bars, delivering superior features

Detailed craftsmanship

CURT RV tow bars are crafted with precision to provide reliability for RVers who flat tow regularly

Uncompromised testing

Computer testing isn't enough on its own — CURT RV tow bars are rigorously tested for reliability in real-world conditions

Why CURT Base Plates

Simplified design

Our simplified base plate designs provide improved fitment on each vehicle, requiring fewer front-end modifications and no extra trimming for RV harness installation

High-quality components

Large 1/4" thick spacers better distribute weight. Superior grade-8 hardware, serrated hex flange nuts and fishwire are included for easy installation from inside the frame

Streamlined installation

Our comprehensive instruction manuals walk through the installation step-by-step, while fewer components and upgraded hardware speed up installation time

ASSEMBLED IN USA

2 INCH

RAMBLER™ STEEL TOW BAR

Scan to learn more

Upgrade Your Tow Bar

- Full articulating head and shackles to prevent binding on rough, uneven terrain
- Rigorous physical testing for proven safety and performance
- Polymer isolator washers reduce friction for smooth, anti-rattle operation
- Premium textured black finish for lasting corrosion and wear resistance
- Two hitch pin holes for adjustable length and added clearance as needed
- Compatible with CURT or Blue Ox® base plates (sold separately)

Non-binding latches

Patent-pending, non-binding latches for easy release on uneven ground

Three stowing positions

Three stowing positions to avoid obstructions and maximize versatility

Lightweight

With a total weight of only 40 pounds, the Rambler is easy to lift, carry and install

Part #	Shank Size	GTVW	Finish
70001	2"	7,500 lbs.	Textured black

ASSEMBLED IN USA

CUSTOM-FIT TOW BAR BASE PLATES

For base plate application guide see page 230

- Distributes weight equally for reduced stress on the vehicle frame
- Made with a vehicle-specific design for a custom fit
- Precisely welded for superior strength and longevity
- Physically tested to gross vehicle weight rating (GVWR)
- Co-cured in a rust-resistant liquid A-coat with a gloss black powder coat finish (zinc-plated attachment tabs)

CURT	TOW BAR BASE PLATES								RV HARNESSES					
	Installation may be too difficult for some users. Visit curtmfg.com/storelocator to find an installer. Always consult your vehicle owner's manual for proper flat towing procedures and limitations. Never exceed the recommended gross vehicle weight rating (GVWR).								**Add-On** **#58920** - powered converter add-on compatible					
Make / Model	Style / Notes	Years	Part #	Foot Notes	PC	Tab Ht.	Tab Width	Ins Time (hrs)	Years	Part #	Foot Notes	PC	Ins Diff.	Add-On #
Buick														
Enclave	--	08-17	70124*	A, C, D, E, I	103	17.75"	18"	3.0	13-17	58908	--	E35	Mod.	--
									08-12	58932	--	E26	Mod.	--
Envision	--	16-20	70117	A, C, D, E, G, I	103	17.25"	24"	3.0	16-20	58968	--	E26	Easy	--
Cadillac														
Escalade	--	15-20	70111	A, C, D, E	98	17.5"	32.5"	3.0	15-20	58965	--	E29	Easy	--
SRX	--	10-16	70123	A, C, I	103	16.5"	18"	3.0	--	--	--	--	--	--
Chevrolet														
Blazer	--	19-22	70138	A, C, D, E, I	103	13.5"	20"	4.0	--	--	--	--	--	--
Colorado	--	15-20	70107	C, E, G, I	103	23"	28"	3.5	15-22	58910	--	E21	Easy	--
Equinox	--	18-22	70108	A, C, E, I	98	16"	23"	4.0	22-24	52105	w/ LED taillights	E26	Mod.	--
										58988	w/o LED taillights	E25	Mod.	--
		10-17	70109	A, C, D, E, G, I	103	15.5"	24"	3.0	18-21	58974	w/ LED taillights	E19	Mod.	--
										58971	w/o LED taillights	E30	Mod.	--
									10-17	58900	--	E21	Mod.	--
Silverado 1500	--	19-24	70141	A, C, F	99	21"	31.25"	3.0	19-24	58984	--	E25	Easy	--
		16-18	70120	A, C, D, E, F	103	18"	32.5"	3.0	16-18	58967	w/o LED taillights	E21	Easy	--
Silverado 1500 LD	--	19-19	70120	A, C, D, E, F	103	18"	32.5"	3.0	19-19	58967	w/o LED taillights	E21	Easy	--
Silverado 1500 LTD	--	22-22	70141	A, C, F	99	21"	31.25"	3.0	22-22	58984	--	E25	Easy	--
Silverado 2500 HD	--	15-19	70131*	C, F	103	18"	32.5"	1	16-19	58967	w/o LED taillights	E21	Easy	--
Silverado 3500 HD	--	15-19	70131*	C, F	103	18"	32.5"	1	16-19	58967	w/o LED taillights	E21	Easy	--
Sonic	--	12-20	70116	A, C, D, E, I	103	13.5"	18"	2.0	12-16	58936	--	E19	Easy	--
Suburban	Excluding Z71 or adaptive cruise	15-20	70111	A, C, D, E	98	17.5"	32.5"	3.0	15-20	58966	--	E23	Easy	--
	Z71, excluding adaptive cruise	15-20	70120	A, C, D, E, F	103	18"	32.5"	3.0						
Tahoe	Excluding Z71 or adaptive cruise	15-20	70111	A, C, D, E	98	17.5"	32.5"	3.0	15-20	58966	--	E23	Easy	--
	Z71, excluding adaptive cruise	15-20	70120	A, C, D, E, F	103	18"	32.5"	3.0						
Traverse	Excluding adaptive cruise	19-21	70136	A, C, D, E	103	16"	37.5"	3.0	--	--	--	--	--	--
Dodge														
Durango	--	11-13	70101	A, C, D, F, G	98	17.5"	34.75"	3.0	11-13	58959	--	E23	Easy	58920
Ram 2500	--	03-10	70142*	B, D, E	99	25.5"	24"	2.0	--	--	--	--	--	--
Ram 3500	--	03-10	70142*	B, D, E	99	25.5"	24"	2.0	--	--	--	--	--	--

TOW BAR BASE PLATE APPLICATION GUIDE FOOTNOTE KEY			For the most up-to-date application information, please visit curtmfg.com	
A Frame drilling required	**C** Baseplate concealed	**E** Concealed trimming required	**G** Permanent part removal	**I** Vehicle component mods or relocation
B Baseplate exposed	**D** Visible trimming required	**F** Tow hook removal required	**H** Rivet removal and replacement required	**J** Mounts to factory tow loop

* Continued while supplies last

LIPPERT

CURT

TOW BAR BASE PLATES

Installation may be too difficult for some users. Visit curtmfg.com/storelocator to find an installer.

Always consult your vehicle owner's manual for proper flat towing procedures and limitations. Never exceed the recommended gross vehicle weight rating (GVWR).

RV HARNESSES

Add-On

#58920 - powered converter add-on compatible

Make / Model	Style / Notes	Years	Part #	Foot Notes	PC	Tab Ht.	Tab Width	Ins Time (hrs)	Years	Part #	Foot Notes	PC	Ins Diff.	Add-On #
Ford														
Bronco	With heavy duty modular bumper	21-21	70140	C, J	39	26"	22"	0.5	21-23	58992	w/ LED taillights	E28	Mod.	--
										58996	w/o LED taillights	E24	Mod.	--
Expedition	--	18-22	70139	A, C, E, F	103	16"	34.5"	3.0	07-17	58988	--	E25	Easy	--
		15-17	70130	A, C, F, G	103	17.5"	35"	3.0						
			70106*	A, C, F, G	103	17.5"	35"	3.0						
Explorer	--	16-19	70114	A, C, D, E	103	16.5"	22"	3.0	16-19	58976	--	E19	Mod.	--
F-150	Excl. Lightening	09-23	70130	A, C, F, G	103	19"	33.5"	3.0	21-23	52103	w/ LED taillights	E25	Easy	--
	--	09-20	70106*	A, C, F, G	103	17.5"	35"	3.0	21-23	58989	w/ backup sensors, excl. LED taillights	E24	Easy	--
									15-18	58970	--	E22	Easy	--
									09-14	58912	--	E30	Easy	--
F-250 / F-350 Super Duty	--	20-23	70133	C, D	103	17.25"	24"	2.0	23-23	52106	w/o LED taillights	E27	Easy	--
		17-19	70137	A, C, E, F	103	24.5"	34.5"	3.0	21-22	52102	w/ backup sensors	E23	Easy	--
									20-22	58987	Excl. rear sensors and LED taillights	E24	Easy	--
									17-19	58987	--	E24	Easy	--
Fiesta	--	14-19	70119*	A, C, D, E, I	103	22"	24"	3.0	14-19	58977*	Sedan	E19	Mod.	58920
										58972	Hatchback	E24	Mod.	58920
Ranger	--	19-23	70127	C, F, G	98	17"	31"	1.0	19-22	58986	w/ blind spot detect	E25	Easy	--
GMC														
Acadia	--	17-19	70118	A, C, D, E	103	16"	20"	3.0	17-19	58973	--	E25	Easy	--
		13-16	70124*	A, C, D, E, I	103	17.75"	18"	3.0	13-16	58908	--	E35	Mod.	--
Acadia Limited	--	17-17	70124*	A, C, D, E, I	103	17.75"	18"	3.0	17-17	58908	--	E35	Mod.	--
Canyon	--	15-20	70107	C, E, G, I	103	23"	28"	3.5	15-22	58910	--	E21	Easy	--
Sierra 1500	--	19-24	70141	A, C, F	99	21"	31.25"	3.0	19-24	58984	--	E25	Easy	--
		16-18	70120	A, C, D, E, F	103	18"	32.5"	3.0	16-18	58967	w/o LED taillights	E21	Easy	--
Sierra 1500 Limited	--	22-22	70141	A, C, F	99	21"	31.25"	3.0	22-22	58984	--	E25	Easy	--
		19-19	70120	A, C, D, E, F	103	18"	32.5"	3.0	19-19	58967	w/o LED taillights	E21	Easy	--
Sierra 2500 HD / 3500 HD	--	15-19	70131*	C, E, F	103	18"	32.5"	1	16-19	58967	w/o LED taillights	E21	Easy	--
Terrain	--	10-17	70109	A, C, D, E, G, I	103	15.5"	24"	3.0	10-17	58900	--	E21	Easy	--
Yukon	Excluding Z71 or adaptive cruise	15-20	70111	A, C, D, E	98	17.5"	32.5"	3.0	15-20	58965	--	E29	Easy	--
Yukon XL	Excluding Z71 or adaptive cruise	15-20	70111	A, C, D, E	98	17.5"	32.5"	3.0	15-20	58965	--	E29	Easy	--

TOW BAR BASE PLATE APPLICATION GUIDE FOOTNOTE KEY

For the most up-to-date application information, please visit curtmfg.com

A Frame drilling required	**C** Baseplate concealed	**E** Concealed trimming required	**G** Permanent part removal	**I** Vehicle component mods or relocation
B Baseplate exposed	**D** Visible trimming required	**F** Tow hook removal required	**H** Rivet removal and replacement required	**J** Mounts to factory tow loop

* Continued while supplies last

CURT	TOW BAR BASE PLATES								RV HARNESSES					
	Installation may be too difficult for some users. Visit curtmfg.com/storelocator to find an installer. Always consult your vehicle owner's manual for proper flat towing procedures and limitations. Never exceed the recommended gross vehicle weight rating (GVWR).								**Add-On** **#58920** - powered converter add-on compatible					
Make / Model	**Style / Notes**	**Years**	**Part #**	**Foot Notes**	**PC**	**Tab Ht.**	**Tab Width**	**Ins Time (hrs)**	**Years**	**Part #**	**Foot Notes**	**PC**	**Ins Diff.**	**Add-On #**
Honda														
CR-V	--	12-14	70104	C, D, E, G, I	103	15.5"	24"	2.0	12-16	58904	--	E21	Mod.	--
		07-11	70115	A, C, E, I	103	16"	19"	3.0	07-11	58901	--	E21	Mod.	--
Jeep														
Cherokee	Aluminum bumper w/o tow hooks	19-23	70132	C, D, G, H	103	19.5"	37"	3.0	19-22	58963	--	E23	Easy	--
	Steel bumper with tow hooks	19-23	70103	C, F, G, H	103	21"	37.5"	2.0						
	Trailhawk	14-18	70134	C, E, F, H	103	20"	37.25"	3.0	14-18	58909	--	E27	Mod.	58920
Gladiator	--	20-23	70129	A, B, E	103	17.25"	24"	3.0	20-23	58964	--	E29	Mod.	--
Grand Cherokee	--	11-21	70101	A, C, D, F, G	98	17.5"	34.75"	3.0	14-21	58907	--	E21	Mod.	--
									07-13	58940*	--	E31	Easy	--
Grand Cherokee WK	--	22-22	70101	A, C, D, F, G	98	17.5"	34.75"	3.0	22-22	58907	--	E21	Mod.	--
Liberty	--	05-07	70128*	A, B, F	103	19"	20"	3.0	02-07	58917	--	E29	Mod.	58920
Wrangler	JL	18-24	70105	A, B, E	103	18"	24"	2.0	18-23	58964	JL	E29	Easy	--
	JK, excl. Rubicon, Hard Rock, 75th Anny & ARB bump.	07-18	70102	A, B, E	98	14.5"	24"	2.0	07-18	58903	JK, excl. right hand drive	E27	Easy	58920
	JK, excl. std bump.	07-18	70110	A, B, E	103	17"	24"	2.0						
	TJ	97-06	70112	A, B	103	17.75"	24"	2.0	97-06	58902	--	E26	Easy	58920
Lincoln														
Navigator	--	18-22	70139	A, C, E, F	103	16"	34.5"	3.0	--	--	--	--	--	--
		15-17	70130	A, C, F, G	103	17.5"	35"	2.0						
			70106*	A, C, F, G	103	17.5"	35"	3.0						
Ram														
1500	--	16-18	70121	A, C, E	103	17.5"	35"	1.0	13-18	58916	Excluding LED taillights	E26	Mod.	--
										58906	w/ LED taillights	E25	Mod.	--
1500 Classic	--	19-23	70121	A, C, E	103	17.5"	35"	1.0	19-22	58916	Excluding LED taillights	E26	Mod.	--
										58906	w/ LED taillights	E25	Mod.	--

TOW BAR BASE PLATE APPLICATION GUIDE FOOTNOTE KEY			For the most up-to-date application information, please visit curtmfg.com	
A Frame drilling required	**C** Baseplate concealed	**E** Concealed trimming required	**G** Permanent part removal	**I** Vehicle component mods or relocation
B Baseplate exposed	**D** Visible trimming required	**F** Tow hook removal required	**H** Rivet removal and replacement required	**J** Mounts to factory tow loop

* Continued while supplies last

LIPPERT

RAMBLER™ TOW BAR LOCK SET

- Secures tow bar, vehicle and RV attachment points
- Easy-to-operate, 1/4-turn lock activation
- Watertight dust cap prevents internal corrosion
- Includes six keys for added convenience

Lock set includes matching keys for convenience

Helps deter theft and tampering when left unattended

70005

Part #	Fits Tube Size	Hitch Pin Diameter	Tow Bar Arm Lock Pin Diameter	Finish	Includes
70005	Up to 2-1/2"	5/8"	1/2"	Chrome-plated	Two tow bar arm locks and one hitch lock

MADE IN USA

2 INCH

HIGH-LOW HITCH RECEIVER ADAPTER

NEW

- Fits industry-standard 2" hitch receiver tubes and accepts 2" shanks
- Ideal for leveling a tow bar with vehicle base plates

45797

45798

45808

Part #	Shank Size	Accepts	GTVW	Drop	Rise	Length	Finish
45797	2"	2" shank	7,500 lbs.	2"	2"	8"	Gloss black
45798	2"	2" shank	7,500 lbs.	4"	4"	8"	Gloss black
45808 N	2"	2" shank	7,500 lbs.	6"	6"	8"	Gloss black

RAMBLER™ TOW BAR COVER

- Acts as a storage bag when not in use
- Durable construction featuring UV-resistant vinyl and zipper
- Weather-resistant to protect from the elements
- Designed for use with CURT Rambler tow bar
- Shank fits within the cover when tow bar is folded
- Form-fitted cover that provides a comfortable fit over the tow bar

NEW

70010

Part #	Fits
70010 N	CURT Rambler tow bar (70001)

TOW BAR & BASE PLATE REPLACEMENT PARTS

19261

19262

70002

70006

70008

Part #	Description	Break Strength	Length	Cable Diameter	Hook Opening
19261	Tow bar pins and lynch pins, qty 2	--	--	--	--
19262	Tow bar rubber bellow, qty 2	--	--	--	--
70002	Tow bar attachment tab, qty 1	--	7-3/4"	--	--
70003	Tow bar attachment tab, qty 1	--	9-1/4"	--	--
70006	Tow bar base plate safety cable, qty 1	3,500 lbs.	36"	1/4"	--
70007	Tow bar base plate safety cable, qty 1	7,500 lbs.	36"	3/8"	--
70008	Tow bar safety cable, qty 1	7,500 lbs.	84"	3/8"	17/32"

Attachment tabs seamlessly blend a factory appearance when not in use

UNIVERSAL TOW BARS

- Ideal for dingy towing a small vehicle behind an RV
- Lightweight design for easy handling
- Universal brackets bolt to the frame of the vehicle (trimming may be required)
- Includes universal frame brackets and mounting hardware
- Compact, retail-friendly packaging (#19750)
- Cannot be used with CURT base plates

19750

19745

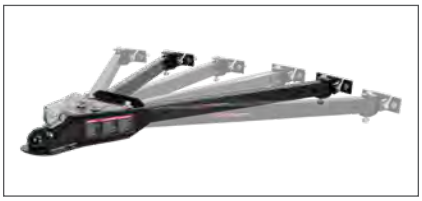
Adjustable arm width allows for fitment on a variety of vehicles

Part #	Capacity	Arm Structure	Adjustment Range	Ball Diameter	Finish
19750	5,000 lbs.	Two pieces, bolt together	26" to 40" in width	2"	Gloss black
19745*	5,000 lbs.	One-piece	26" to 41" in width	2"	Gloss black

* Continued while supplies last

Replacement Parts

Part #	Description	Fits
19746	Replacement safety pin (new style)	19745
21500	Replacement pin & clip (old style)	19745
19748	Bumper brackets	19745

19746

21500

19748

EXTENDED VIEW TOW MIRROR

- Compatible with pickup or SUV left or right side mirror
- Fully adjustable design can be used in horizontal or vertical position
- Hinging arm and elastic straps provide easy and secure installation

Attaches to side mirror to expand view with a trailer

Articulating head allows precise angling

20002

Part #	Adds	Fits
20002	5" to 7-1/2" to existing mirror	Mirrors 4" to 11" high

TOWING LIGHTS

- Easily adds tow lights to a dinghy-towed vehicle or trailer without lights
- Non-scratch magnetic base protects vehicle finish
- Perfect for boats, RVs and flat towing applications
- 20' cord with 4-way flat plug allows for plug-and-play convenience
- Snap locks included for simple, secure splice-in connection
- Patent# D355,270

53204 53200

Bulk #	Pkg #	Length	Plug	Description
53200	53204*	20'	4-way flat	Auxiliary towing lights

* Includes a sturdy, reusable case

DINGHY TOWING ADAPTER HARNESSES

- Plugs into CURT RV harness 4-flat to provide a standard connector under the dinghy vehicle's hood
- Allows for flexible mounting on the front of the dingy vehicle versus welded connector bracket
- 6' length is ideal for equipping dinghy vehicle for flat towing behind RV
- Some manual wiring required

58980

58981

Part #	From Dinghy Vehicle	To RV	Length	Material
58980	4-way flat	7-way RV blade	6 feet	Plastic
58981	4-way flat	6-way round	6 feet	Plastic

DINGHY TOWING ADAPTERS

- Ideal for connecting motorhomes to dinghy vehicle for flat towing
- UV-resistant coiled cable extends without scraping the ground
- Simple plug-and-play design eliminates the need for cutting or splicing
- Constructed from die-cast or durable plastic
- Informative, full-color, retail packaging

57271

57280

57281

57282

57283

57284

57285

57286

Part #	From Dinghy Vehicle	To RV	Extends	Included Socket	Socket Housing
57271	4-way flat	7-way RV blade	5 feet	--	Plastic
57280	4-way flat	7-way RV blade	8 feet	--	Plastic
57281	5-way flat	7-way RV blade	5 feet	--	Plastic
57282	5-way flat	7-way RV blade	8 feet	--	Plastic
57283	6-way round	7-way RV blade	8 feet	One 6-way round	Plastic and die cast
57284	7-way RV blade	7-way RV blade	8 feet	One USCAR 7-way RV blade	Plastic
57285	4-way round	7-way RV blade	8 feet	One 4-way round	Plastic and die cast
57286	6-way round	6-way round	8 feet	Two 6-way round	Die cast

TOW BAR RV HARNESSES

For RV harness application guide see page 238

- Integrated block diodes isolate sensitive vehicle electronics from RV signals
- Uses towed vehicle's existing taillights, brake lights and turn signals
- Optional harness add-on equips vehicle with standard 4-way flat for towing a trailer (not available for all RV harnesses; see table)

58948

Connects a towed vehicle to an RV using a standard 4-way flat trailer plug

Simple plug-and-play design eliminates the need for cutting or splicing

Includes harness, 4-flat extension, mounting bracket and hardware

SPLICE-IN RV HARNESS

- Connects a towed vehicle to an RV using a standard 4-way flat trailer plug
- Splices into vehicle's electrical system with included butt connectors
- Color-coded wires with wiring guide for easier installation
- Integrated block diodes isolate sensitive vehicle electronics from RV signals
- Uses towed vehicle's existing taillights, brake lights and turn signals
- Not compatible with PWM electrical systems

58979

Part #	Description
58979	Splice-in RV harness

RV HARNESS DIODE KIT

- Allows RV to power lights only on the towed vehicle without power feeding back
- Requires trailer-side 4-way flat plug with 20' wires or similar

Part #	Amps / Block	Volts / Block	Includes
58999	3 amps	24 volts max	Four diode blocks / 12 spade terminals

58999

TOW BAR RV HARNESS APPLICATION GUIDE

Make / Model	Style	Years	Part #	Add-On #
Acura				
Enclave	--	13 - 17	58908	58920
		08 - 12	58932*	--
Envision	--	16 - 20	58968	--
Rainier	--	04 - 07	58925*	--
Cadillac				
Escalade	--	21 - 23	58993	--
		15 - 20	58965	--
		07 - 12	58927	--
Escalade ESV	--	21 - 23	58993	--
SRX	--	10 - 16	58978	--
Chevrolet				
Avalanche	--	07 - 12	58924*	--
Captiva Sport	--	12 - 12	58933*	58920
Cobalt	Sedan, excl. SS	05 - 10	58931*	--
	Coupe, excl. SS	05 - 10	58929*	--
Colorado	--	15 - 22	58910	--
		04 - 12	58926	58920
Cruze	--	11 - 15	58935*	--
Cruze Limited	--	16 - 16	58935*	--
Equinox	With LED taillights	22 - 24	52105	--
	Without LED taillights	22 - 24	58988	--
	With LED Taillights	18 - 21	58974	--
	Without LED taillights	18 - 21	58971	--
	--	10 - 17	58900	--
HHR	Excluding SS	06 - 11	58929*	--
Malibu	Excluding LTZ	13 - 15	58934*	--
		08 - 12	58932*	--
Malibu Limited	Excluding LTZ	16 - 16	58934*	--
Silverado 1500	--	19 - 24	58984	--
	Without LED taillights	16 - 18	58967	--
Silv. 1500 LD	Without LED taillights	19 - 19	58967	--
Silv. 1500 LTD	--	22 - 22	58984	--
Silv. 2500 HD	--	24 - 24	52107	--
		20 - 23	58984	--
	Without LED taillights	16 - 19	58967	--
Silv. 3500 HD	--	24 - 24	52107	--
		20 - 23	58984	--
	Without LED taillights	16 - 19	58967	--
Sonic	--	12 - 16	58936	--
Suburban	--	21 - 23	58985	--
		15 - 20	58966	--

Make / Model	Style	Years	Part #	Add-On #
Chevrolet (continued)				
Suburban 1500	--	07 - 13	58927	--
Tahoe	--	21 - 23	58985	--
		15 - 20	58966	--
		07 - 12	58927	--
Trailblazer	--	02 - 08	58925*	--
Traverse	--	13 - 17	58922*	58920
		09 - 12	58932*	--
Dodge				
Caliber	--	08 - 12	58959*	--
Durango	--	14 - 23	58957	--
		11 - 13	58959*	--
Nitro	--	07 - 11	58937	58920
Ram 1500	--	09 - 10	58916	--
Fiat				
500	--	12 - 18	58911	--
Ford				
Bronco	With LED Taillights	21 - 23	58992	--
	Without LED taillights	21 - 23	58996	--
Edge	--	11 - 14	58914*	58920
		07 - 10	58952	58920
Escape	--	17 - 21	58954	--
		13 - 16	58943*	58920
		05 - 12	58952	58920
Expedition	--	07 - 17	58988	--
Explorer	--	16 - 19	58976	--
F-150	With LED taillights and backup sensors	21 - 23	52103	--
	With backup sensors, excluding LED taillights	21 - 23	58989	--
	With LED taillights, backup sensors, and onboard scale	21 - 23	52104	--
	Without LED taillights	15 - 18	58970	--
	--	09 - 14	58912	--
F-250 / F-350 Super Duty	Without LED taillights	23 - 23	52106	--
	With backup sensors	21 - 22	52102	--
	Excl. rear sensors and LED taillights	20 - 22	58987	--
	--	17 - 19	58987	--
Fiesta	Sedan	14 - 19	58977*	--
	Hatchback	14 - 19	58972*	--
		11 - 13	58946*	--

58920 - powered converter add-on compatible
* Continued while supplies last

Make / Model	Style	Years	Part #	Add-On #
Ford (continued)				
Flex	--	09 - 19	58941*	--
Focus	Sedan	12 - 18	58944*	58920
	Hatchback	12 - 14	58905*	--
Freestar	--	04 - 07	58952	58920
Fusion	--	13 - 20	58945*	58920
		06 - 12	58942*	58920
Ranger	With blind spot detection	19 - 24	58986	--
GMC				
Acadia	--	17 - 19	58973*	--
		13 - 16	58908	58920
Acadia Limited	--	17 - 17	58908	58920
Canyon	--	15 - 22	58910	--
		04 - 12	58926	58920
Envoy	--	02 - 09	58925*	--
Sierra 1500	--	19 - 24	58984	--
	Without LED taillights	16 - 18	58967	--
Sierra 1500 Limited	--	22 - 22	58984	--
	Without LED taillights	19 - 19	58967	--
Sierra 2500 HD	--	24 - 24	52107	--
		20 - 23	58984	--
	Without LED taillights	16 - 19	58967	--
Sierra 3500 HD	--	24 - 24	52107	--
		20 - 23	58984	--
	Without LED taillights	16 - 19	58967	--
Terrain	--	10 - 17	58900	--
Yukon	--	21 - 23	58985	--
		15 - 20	58965	--
		07 - 14	58927	--
Yukon XL	--	21 - 23	58985	--
		15 - 20	58965	--
Yukon XL 1500	--	07 - 14	58927	--
Honda				
CR-V	--	12 - 16	58904	--
		07 - 11	58901	--
		02 - 06	58949	--
Element	--	07 - 11	58947*	--
Fit	--	07 - 13	58948*	58920
Isuzu				
i-280	--	06 - 06	58926	58920
i-290	--	07 - 08	58926	58920
i-350	--	06 - 06	58926	58920
i-370	--	07 - 08	58926	58920
Jeep				
Cherokee	--	19 - 22	58963	--
		14 - 18	58909	58920
Compass	--	22 - 23	58997	--
		17 - 21	58958*	--
		11 - 16	58938*	58920

Make / Model	Style	Years	Part #	Add-On #
Jeep (continued)				
Gladiator	--	20 - 23	58964	--
Grand Cherokee	--	22 - 23	58998	--
		14 - 21	58907	--
		07 - 13	58940*	--
		05 - 06	58939*	58920
		99 - 04	58915	58920
Grand Chero. L	--	21 - 23	58998	--
Grnd Chero. WK	--	22 - 22	58907	--
Liberty	--	08 - 12	58937	58920
		02 - 07	58917	58920
Patriot	--	08 - 17	58959*	--
Wrangler	JL	18 - 23	58964	--
	JK, excl. right hand drive	07 - 18	58903	--
	TJ	98 - 06	58902	--
Lincoln				
MKX	--	07 - 10	58952	58920
Mazda				
Tribute	--	08 - 11	58952	58920
Mercury				
Mariner	--	05 - 11	58952	58920
Oldsmobile				
Bravada	--	02 - 04	58925*	--
Pontiac				
G5	Sedan	07 - 10	58931*	--
	Coupe	07 - 09	58929*	--
Pursuit	Sedan	05 - 06	58931*	--
	Coupe	05 - 06	58929*	--
Ram				
1500	--	19 - 23	58975	--
	Without LED taillights	13 - 18	58916	--
	With LED Taillights	13 - 18	58906	--
	--	11 - 12	58916	--
1500 Classic	Without LED taillights	19 - 23	58916	--
	With LED Taillights	19 - 23	58906	--
2500 / 3500	With LED Taillights	19 - 22	58995	--
	--	13 - 18	58994	--
Saturn				
Vue	--	08 - 10	58933*	58920
		02 - 07	58928*	58920
Suzuki				
Grand Vitara	--	06 - 12	58950*	58920
SX4	--	07 - 11	58950*	58920
Toyota				
RAV4	--	13 - 18	58956*	--

58920 - powered converter add-on compatible
* Continued while supplies last

GOOSENECK HITCHES

FEATURED PRODUCTS

Scan QR code for current applications or visit curtmfg.com

Universal OEM offset balls

Improve the clearance between the truck bed and trailer with our new universal OEM puck system gooseneck balls with 4" offset.

RockerBall™ gooseneck ball

RockerBall™ features ShockDrop™ technology to improve ride quality by reducing chucking and jarring, providing comfort for passengers.

OEM-style hitches

These OEM-style hitches are designed for a custom fit on the latest Chevrolet, Ford, GMC and Ram 2500 and 3500 pickup trucks.

PRODUCT INDEX

ABC

242 Selecting a Gooseneck

244 OEM Puck System Kits

246 Universal OEM Puck System Offset Balls

248 OEM-Style Hitches

250 Double Lock EZr™ Hitches

252 Original Double Lock™ Hitches

253 RockerBall™ Gooseneck Ball

256 Over-Bed Hitches

256 Fixed Ball Hitches

258 X5™ 5th Wheel Adapter Plates

259 5th Wheel Rail Hitches

260 Gooseneck Electrical

SELECTING A GOOSENECK HITCH

There are three basic methods for installing a gooseneck hitch:

A | OEM PUCK SYSTEM OPTIONS

Many pickups today are factory-equipped with a truck bed puck system. A puck system provides attachment points for both gooseneck and 5th wheel towing.

For trucks with a puck system, an OEM puck system gooseneck kit is the easiest way to tow a gooseneck trailer. The components can be installed or removed quickly, as necessary.

See page 244 to select one of these kits.

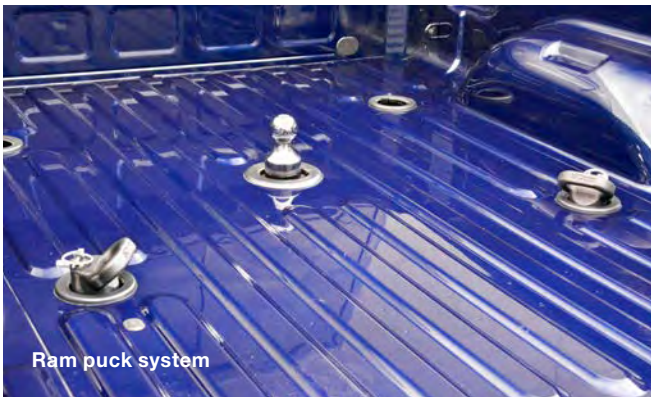
Ram puck system

B | HITCH & BRACKET OPTIONS

The traditional method for installing a gooseneck hitch on trucks without factory-installed puck systems are vehicle-specific brackets. CURT OEM-style gooseneck hitches are a unique variant of the traditional method, featuring an all-in-one, custom-fit design that bolts to the truck frame like a factory hitch. No additional brackets required. See page 248 for our OEM-style hitches.

We also offer a variety of traditional gooseneck hitches that mount with vehicle-specific brackets. Options include our Double Lock EZr™, original Double Lock™ and more. Start on page 250 for our traditional gooseneck hitch line.

Double Lock EZr

C | EXISTING 5TH WHEEL BASE RAIL OPTIONS

For trucks with 5th wheel rails already installed, CURT offers 5th wheel rail gooseneck hitches. These 5th-wheel-to-gooseneck adapters easily drop into any industry-standard base rails.

A 5th wheel rail hitch provides a ball ready for towing a gooseneck trailer, and the hitch can easily be removed from the rails whenever necessary to allow for 5th wheel towing or clearing the bed for cargo.

See page 258 for 5th wheel rail goosenecks.

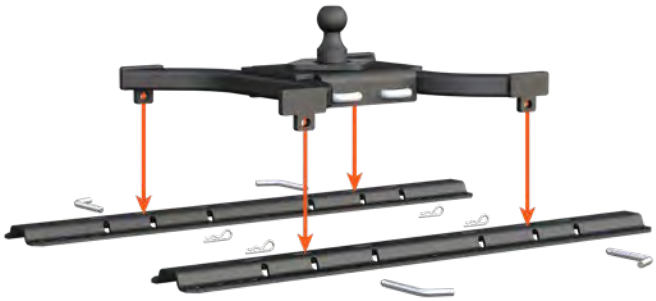

OEM puck system anchor kit

OEM-style hitches

Bent plate hitch

OEM PUCK SYSTEMS

30K GTW | 38K GTW

OEM PUCK SYSTEM GOOSENECK KITS

Available for Chevrolet, Ford, GMC, Nissan and Ram, these kits utilize the truck bed puck system built into select pickups with the factory installed towing prep package (see table below). The ball and anchors easily drop into the pucks, lock into place and are immediately ready to couple to a gooseneck trailer.

60692

Each kit includes:

- 2-5/16" gooseneck ball
- Two safety chain anchors with zinc-plated locking pins
- Rubber hole cover
- Durable storage case

Quarter-turn anchoring system

Step 1 - Lift and twist latch to release the retention balls

Step 2 - Drop the ball into OEM puck system hole

Step 3 - Return latch to lock the ball in place for towing

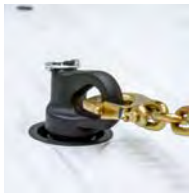

Large safety chain openings accept heavy-duty hooks

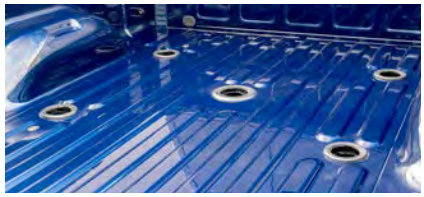

Installation of these products requires an OEM truck bed puck system (see above example, Ram puck system)

Product Details

Gooseneck ball

- Installs easily with quarter-turn latch locking system
- Kits include 2-5/16" (3" ball sold separately)
- Stainless steel bearing retention balls keep shank fully locked into the hitch
- Constructed from strong, machine-forged steel alloy
- Protected by a polished chrome-plated mirror finish
- Tested for safety to J2638 specifications (30K balls tested to U.S. VESC V-19)
- Patent #8,955,866

Safety chain anchors

- Provides a reliable connection for gooseneck trailer safety chains
- Simple, drop-in install eliminates the need for tools
- Wide openings accept large safety chain hooks
- Cast steel anchors with durable carbide black powder coat finish
- Patent #9,452,647

Make	Model	Style	Years
Kit Compatibility - See Adjacent Page for Part Numbers			
Chevrolet	Silverado 2500 HD / 3500 HD	With 5th wheel prep package	16 - 24
Ford	F-250 / F-350 Super Duty	With 5th wheel prep package	13 - 23
GMC	Sierra 2500 HD / 3500 HD	With 5th wheel prep package	16 - 24
Nissan	Titan XD	With 5th wheel prep package	16 - 24
Ram	2500 / 3500	With 5th wheel prep package	13 - 24

QUICK AND EASY DROP-IN INSTALLATION

OEM PUCK SYSTEM GOOSENECK KITS & COMPONENTS

60618
Ram

60638
Ram

60692 & 60639
Chevrolet, Ford, GMC, Nissan

60617 & 60698
Ram

60691
Chevrolet, Ford, GMC, Nissan

60601

60629
& 60627

60628
& 60634

66155

Make	GTW / Vertical Load	Ball Size	Rise	Kit #	Ball #	Anchors #	Cover #
30K Kits & Components							
Ram	30,000 / 7,500 lbs.	2-5/16"	1/2"	60618	60601	60617	66155
Chevrolet, Ford, GMC, Nissan	30,000 / 7,500 lbs.	2-5/16"	1-5/8"	60692	60629	60691	66155
Chevrolet, Ford, GMC, Nissan, Ram	30,000 / 7,500 lbs.	2-5/16"	1-5/8"	--	60629	--	--
Chevrolet, Ford, GMC, Nissan, Ram	30,000 / 7,500 lbs.	3"	1-5/8"	--	60628	--	--
38K Kits & Components							
Ram	38,000 / 9,500 lbs.	2-5/16"	1-5/8"	60638	60627	60698	66155
Chevrolet, Ford, GMC, Nissan	38,000 / 9,500 lbs.	2-5/16"	1-5/8"	60639	60627	60691	66155
Chevrolet, Ford, GMC, Nissan, Ram	38,000 / 9,500 lbs.	2-5/16"	1-5/8"	--	60627	--	--
Chevrolet, Ford, GMC, Nissan, Ram	38,000 / 9,500 lbs.	3"	1-5/8"	--	60634	--	--

30K GTW

UNIVERSAL OEM PUCK SYSTEM OFFSET GOOSENECK BALL

NEW

Product Details

Fixed and RockerBall™

- Provides extra 4" of rearward offset for improved turning and clearance
- Rated for up to 30,000 lbs. gross trailer weight and 7,500 lbs. vertical load
- Universal design fits Chevrolet, Ford, GMC, Nissan Titan XD and Ram puck systems (see application fitment in the table below)
- Adjustable anchors eliminate chucking between frame and pucks
- Anti-rotation arms provide stability and promote a smooth, steady tow
- Integrated safety chains holders
- Includes standard 2-5/16" diameter gooseneck ball with 4" rearward offset
- Provides 6-1/2" of rise over the factory OEM puck system
- Forged and machined steel gooseneck ball with yellow-zinc finish
- Frame protected by a highly durable carbide black powder coat finish
- Tested for safety in accordance with SAE J2638
- Patent pending

RockerBall™ specific

- ShockDrop™ technology promotes smooth towing by reducing jerking and jarring
- Cushioned isolator improves ride comfort for animals and passengers
- Offset pin dampens vertical chucking and fore-aft motion during starts and stops
- Virtually maintenance-free with no airbag or bearings to service
- Provides 8" of rise over the factory OEM puck system

Enhanced clearance

Provides an additional 4" of rearward offset and 6-1/2" of rise (8" for RockerBall)

Simple installation

Patented quarter-turn mechanism allows for quick, easy installation

ShockDrop™ (#60668 only)

ShockDrop technology reduces jerking and jarring and promotes a smooth tow

Make	Model	Style	Years
Compatibility - See Adjacent Page for Part Numbers			
Chevrolet	Silverado 2500 HD / 3500 HD	With 5th wheel prep package	20 - 24
Ford	F-250 / F-350 Super Duty	With 5th wheel prep package	13 - 23
GMC	Sierra 2500 HD / 3500 HD	With 5th wheel prep package	20 - 24
Nissan	Titan XD	With 5th wheel prep package	16 - 24
Ram	2500 / 3500	With 5th wheel prep package	13 - 24

PROVIDES AN EXTRA 4" OF REARWARD OFFSET

30K GTW UNIVERSAL OEM PUCK SYSTEM OFFSET GOOSENECK BALLS

60663

60668

Part #	Ball Style	GTW / Vertical Load	Ball Size	Rise	Offset
60663 N	Fixed	30,000 / 7,500 lbs.	2-5/16"	6-1/2"	4"
60668 N	RockerBall	30,000 / 7,500 lbs.	2-5/16"	8"	4"

NO ADDITIONAL HARDWARE OR BRACKETS REQUIRED

HITCHES & BRACKETS

ASSEMBLED IN USA

OEM-STYLE GOOSENECK HITCHES

OEM-style gooseneck hitches are designed for a unique, vehicle specific fit for trucks not equipped with factory-installed puck systems. They quickly and securely bolt onto the truck's frame like a factory trailer hitch, with no drilling or additional parts required.

Streamlined installation

Requires no additional hardware or installation brackets

No drilling necessary except the truck bed holes

Requires no welding, bed flange trimming or bed removal

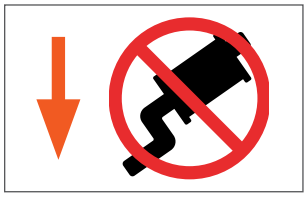

No lowering of exhaust or spare tire on #60702 and #60633

Product Details

- Center locator eliminates the need to measure where the ball hole should be
- Easy, one-person installation
- Quickly bolts on underneath the truck bed in 45 minutes or less (#60614, #60626)
- Places ball in front of rear axle for proper distribution of weight and handling (#60702, #60642)
- U-edging provided for a clean finish on the hole cut for the ball (#60702, #60642)
- Included patented 2-5/16" ball operates with a simple, 1/4-turn latch-locking system to eliminate the need for an under-bed side handle
- Heavy-duty 5/8" spring-loaded safety chain loops for a reliable connection
- Tested for safety in accordance with SAE J2638
- Not compatible with X5 adapters
- Highly durable, rust-resistant, liquid A-coat finish
- **Not compatible with 5th wheel prep packages**

OEM-STYLE GOOSENECK HITCHES

60626 Ram

60614 Ram

NEW

60702 Ford

60633 Ram

60642 Chevrolet / GMC

Make / Model	Style	Years	Part #	GTW / Vertical Load
Chevrolet				
Silverado 2500 HD	--	20 - 24	60642	38,000 / 9,500 lbs.
Silverado 3500 HD	Excluding Cab & Chassis	20 - 24	60642	38,000 / 9,500 lbs.
Ford				
F-250 Super Duty	--	17 - 24	60702	38,000 / 9,500 lbs.
F-350 Super Duty	Excluding Cab & Chassis	17 - 24	60702	38,000 / 9,500 lbs.
F-450 Super Duty	Excluding Cab & Chassis	17 - 22	60702	38,000 / 9,500 lbs.
GMC				
Sierra 2500 HD	--	20 - 24	60642	38,000 / 9,500 lbs.
Sierra 3500 HD	Excluding Cab & Chassis	20 - 24	60642	38,000 / 9,500 lbs.
Ram				
2500	Excluding Cab & Chassis	19 - 24	60633	35,000 / 8,750 lbs.
		14 - 18	60614	30,000 / 7,500 lbs.
3500	Excluding Cab & Chassis	19 - 24	60633	35,000 / 8,750 lbs.
		13 - 18	60626	30,000 / 7,500 lbs.

Not compatible with 5th wheel prep packages

Quarter-turn gooseneck ball

Factory-style gooseneck ball operates with a simple, 1/4-turn latch-locking system

Patented Center Locator eliminates measuring where the ball hole should be. Simply drill up from under the truck bed

30K GTW DOUBLE LOCK EZR™ GOOSENECK HITCH SYSTEM

Product Details & Operation

- Center tested up to 30,000 lbs. GTW and 7,500 lbs. vertical load
- Weight ratings are limited to vehicle manufacturer's stated capacities
- Includes 2-5/16" chrome-plated ball, 5/8" spring-loaded, zinc-plated safety chain loops and grade-8 hardware
- Protected by a durable A-coat finish with carbide black powder coat
- Tested for safety in accordance with SAE J2638

60611

Engage the double locking pins for superior pin strength

Retract the sturdy 3/8" handle and drop the ball into the hole

After towing, flip the ball over to eliminate obstructions

Install the hole cover to protect the ball from the elements

What Makes the Ezr™ Different?

One-person installation

Easy-to-install clips eliminate the need for a second person to hold up the center section while installing the brackets

- Uses carriage bolts when possible for one-wrench tightening
- No need to lower exhaust on Chevrolet, Ford, GMC and most Dodge / Ram models
- No need to relocate cable hanger and ground wire on Dodge / Ram models

No measuring required

Patented Center Locator eliminates the need to measure where the ball hole should be. Simply drill up from under the truck bed

- Safety chain loop holes are drilled from the underside of the truck bed
- No welding or truck bed removal required
- Center Locator covered by patent #D685,299 S

How is the Ezr™ Installed Without Measuring?

Step 1 - Place Center Locator in the gooseneck hitch ball hole

Step 2 - Fully install brackets and hitch to the vehicle frame

Step 3 - Use Center Locator to drill pilot hole up from under bed

Step 4 - Use pilot hole to drill down, no measuring required

30K GTW DOUBLE LOCK EZR™ GOOSENECK HITCH SYSTEM

If a particular application is not listed below,
see page 249 for OEM-style hitches or page 254 for original Double Lock™ hitches

Make / Model	Style	Years	Capacity	EZr Kit #	Footnotes	Hitch #	Bracket #
Chevrolet / GMC							
Silverado 2500	Excl Cab & Chassis	01 - 04	30,000 lbs.	60681	●	60619	60648
Silverado 2500 HD	--	20 - 24	25,000 lbs	60690	●	60611	60701
		11 - 19	30,000 lbs.	60680	●,1	60611	60624
		01 - 10	30,000 lbs.	60681	●	60619	60648
Silverado 2500 HD Classic	Excl Cab & Chassis	07 - 07	30,000 lbs.	60681	●	60619	60648
Silverado 3500	Excl Cab & Chassis	01 - 06	30,000 lbs.	60681	●	60619	60648
Silverado 3500 Classic	Excl Cab & Chassis	07 - 07	30,000 lbs.	60681	●	60619	60648
Silverado 3500 HD	Excl Cab & Chassis	20 - 24	25,000 lbs	60690	●	60611	60701
		11 - 19	30,000 lbs.	60680	●,1	60611	60624
		08 - 10	30,000 lbs.	60681	●	60619	60648
Dodge							
Ram 2500 / 3500	Excl Cab & Chassis	03 - 10	30,000 lbs.	60682	●, 1, 2, 3	60619	60660
Ford							
F-250	--	99 - 99	30,000 lbs.	60685	●	60619	60647
F-250 Super Duty	--	11 - 16	30,000 lbs.	60683	●	60619	60645
		99 - 10	30,000 lbs.	60685	●	60619	60647
F-350 Super Duty	Excl Cab & Chassis	11 - 16	30,000 lbs.	60683	●	60619	60645
		99 - 10	30,000 lbs.	60685	●	60619	60647
GMC							
Sierra 2500	Excl Cab & Chassis	01 - 04	30,000 lbs.	60681	●	60619	60648
Sierra 2500 HD	--	20 - 24	25,000 lbs	60690	●	60611	60701
		11 - 19	30,000 lbs.	60680	●,1	60611	60624
		01 - 10	30,000 lbs.	60681	●	60619	60648
Sierra 2500 HD Classic	Excl Cab & Chassis	07 - 07	30,000 lbs.	60681	●	60619	60648
Sierra 3500	Excl Cab & Chassis	01 - 06	30,000 lbs.	60681	●	60619	60648
Sierra 3500 Classic	Excl Cab & Chassis	07 - 07	30,000 lbs.	60681	●	60619	60648
Sierra 3500 HD	Excl Cab & Chassis	20 - 24	25,000 lbs	60690	●	60611	60701
		11 - 19	30,000 lbs.	60680	●,1	60611	60624
		07 - 10	30,000 lbs.	60681	●	60619	60648
Ram							
2500	--	11 - 13	30,000 lbs.	60682	●, 1, 2, 3	60619	60660
3500	Excl Cab & Chassis	11 - 12	30,000 lbs.	60682	●, 1, 2, 3	60619	60660

1. Passenger-side wheel well flange must be bent for frame rail access
2. Check inverted ball clearance with heavy loads on two-wheel drive
3. Exhaust may have to be permanently lowered on power wagon and Mega cab applications

● =No frame drilling required

30K GTW ORIGINAL DOUBLE LOCK™ GOOSENECK HITCHES

See page 254 for original Double Lock application guide

- Flip-and-store ball keeps truck bed free of obstructions
- Installation requires no welding or truck bed removal
- Heavy-duty handle can be positioned on either side of the vehicle
- Rubber hole cover helps prevent corrosion in trailer ball hole
- Includes spring-loaded safety chain loops and grade-8 hardware
- Highly durable carbide black powder coat finish
- Branded, retail friendly brown box (#60607)

60607

Engage the double locking pins for superior pin strength

Retract the sturdy 3/8" handle and drop the ball into the hole

Chrome trim ring for a clean, professional finish

Part #	Make / Model	Years	Ball Size	Finish	GTW / Vertical Load
60607	Multiple applications for Chevrolet, Ford, GMC, Nissan, Ram **See page 254 for full application listing**	--	2-5/16"	Carbide black	30,000 / 7,500 lbs.
60615	Chevrolet Silverado 1500 & GMC Sierra 1500	07 - 18	2-5/16"	Carbide black	30,000 / 7,500 lbs.
	Chevrolet Silverado 1500 LD & GMC Sierra 1500 Limited	19 - 19			

ORIGINAL DOUBLE LOCK™ GOOSENECK BALLS

- 2-5/16" gooseneck balls rated up to 30,000 lbs. GTW and 7,500 lbs. vertical load

60602

60603

Part #	Description	For Use With
60602	2-5/16" offset ball moves pivot point 4" rearward for added cab clearance	Original Double Lock goosenecks only
60603	2-5/16" riser ball adds 1" clearance for trucks with plastic or rubber bed liners	Original Double Lock goosenecks only

30K GTW ROCKERBALL™ CUSHION HITCH GOOSENECK BALL

Product Details

- ShockDrop™ technology reduces jerking and jarring and promotes a smooth tow
- Virtually maintenance-free with no airbag or bearings to service
- Forged steel construction for dependable towing strength
- Durable carbide black powder coat finish on base and chrome plating on ball
- Heavy-duty plastic storage case keeps components on-hand whenever needed
- Tested for safety to meet SAE J2638 specifications
- Grease zerk fitting provides easy lubrication
- **Not compatible with OEM-style goosenecks**
- Patent pending

60654

ShockDrop™ technology

The cushioned isolator improves ride comfort for animals and passenger

Advanced engineering

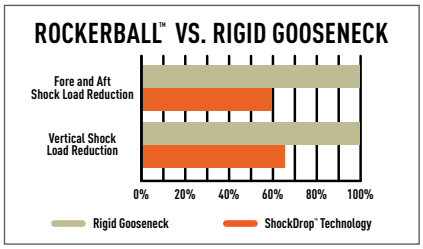

Offset pin dampens vertical chucking and fore-aft motion during starts and stops

Simple installation

Simple, drop-in installation easily replaces traditional gooseneck balls

Part #	Gooseneck Hitch Compatibility	GTW / Vertical Load	Ball Size	Rise
60654	CURT Double Lock Original, CURT EZr and most B&W gooseneck hitches*	30,000 / 7,500 lbs.	2-5/16"	6-1/2"

* For B&W models, hitch must accept gooseneck ball with 2" from the bottom of the shank to center of locking pin hole

30K GTW

ORIGINAL DOUBLE LOCK™ GOOSENECK HITCHES

Make / Model	Style	Years	Footnotes	Kit # (Hitch and Brackets)	Hitch #	Bracket #
Chevrolet						
C/K 1500	--	88 - 99	●	60713	60607	60631
C/K 2500 / C3500	Excluding Cab & Chassis	88 - 00	●	60713	60607	60631
Silverado 1500	--	07 - 18	●	60711	60615	60632
		99 - 06	●	60712	60607	60652
Silverado 1500 Classic	--	07 - 07	●	60712	60607	60652
Silverado 1500 HD	--	01 - 06	●	60712	60607	60652
Silverado 1500 HD Classic	--	07 - 07	●	60712	60607	60652
Silverado 1500 LD	--	19 - 19	●	60711	60615	60632
Silverado 2500	Excluding Cab & Chassis	99 - 04	●	60712	60607	60652
Silverado 2500 HD	Excluding Cab & Chassis	11 - 19	●	60710	60607	60604
		01 - 10	●	60712	60607	60652
Silverado 2500 HD Classic	Excluding Cab & Chassis	07 - 07	●	60712	60607	60652
Silverado 3500	Excluding Cab & Chassis	01 - 06	●	60712	60607	60652
Silverado 3500 Classic	Excluding Cab & Chassis	07 - 07	●	60712	60607	60652
Silverado 3500 HD	Excluding Cab & Chassis	11 - 19	●	60710	60607	60604
		07 - 10	●	60712	60607	60652

All models: Brake, fuel and electrical lines may need to be loosened or repositioned. Heat shield requires modification or removal.

1. Passenger-side wheel well must be notched for frame rail access
2. Parking brake cable bracket may require relocation
3. Exhaust may have to be permanently lowered on 2005 and newer models
5. Ball cannot be turned over. Brake lines must be cable-tied (ties included)
6. Do not invert ball with heavy loads on two-wheel-drive models

● = No frame drilling required

On two-wheel-drive trucks, a clearance check must be performed when truck is loaded and unloaded to verify the inverted ball will not interfere with the top of the differential. See footnote 6.

Make / Model	Style	Years	Footnotes	Kit # (Hitch and Brackets)	Hitch #	Bracket #
Dodge						
Ram 1500	--	09 - 10	●	60730	60607	60657
		02 - 08	●, 1, 2, 6	60733	60607	60659
		94 - 01	●	60734	60607	60635
Ram 2500 / 3500	Excluding Cab & Chassis	03 - 10	●, 1, 2, 6	60732	60607	60661
		94 - 02	●	60734	60607	60635
Ford						
F-150	Excl. Police Responder, Raptor or Lightening	22 - 23	●	60724	60607	60649
	Excl. Police Responder or Raptor	15 - 21	●	60724	60607	60649
	--	04 - 14	●	60721	60607	60641
		97 - 03	●	60722	60607	60637
		80 - 96	1	60723	60607	60636
F-150 Heritage	--	04 - 04	●	60722	60607	60637
F-250	Light Duty	97 - 99	●	60722	60607	60637
	Excluding Cab & Chassis	80 - 98	1	60723	60607	60636
F-250 Super Duty	--	99 - 16	●, 3	60720	60607	60644
F-350	Excluding Cab & Chassis	80 - 98	1	60723	60607	60636
F-350 Super Duty	Excluding Cab & Chassis	99 - 16	●, 3	60720	60607	60644
F-450 Super Duty	Excluding Cab & Chassis	08 - 12	●, 3	60720	60607	60644
GMC						
C/K 1500	--	88 - 99	●	60713	60607	60631
C/K 2500 / C3500	Excluding Cab & Chassis	88 - 00	●	60713	60607	60631
Sierra 1500	--	07 - 18	●	60711	60615	60632
		99 - 06	●	60712	60607	60652
Sierra 1500 Classic	--	07 - 07	●	60712	60607	60652
Sierra 1500 HD	--	01 - 06	●	60712	60607	60652
Sierra 1500 HD Classic	--	07 - 07	●	60712	60607	60652
Sierra 1500 Limited	--	19 - 19	●	60711	60615	60632
Sierra 2500	Excluding Cab & Chassis	99 - 04	●	60712	60607	60652
Sierra 2500 HD	Excluding Cab & Chassis	11 - 19	●	60710	60607	60604
		01 - 10	●	60712	60607	60652
Sierra 2500 HD Classic	Excluding Cab & Chassis	07 - 07	●	60712	60607	60652
Sierra 3500	Excluding Cab & Chassis	01 - 06	●	60712	60607	60652
Sierra 3500 Classic	Excluding Cab & Chassis	07 - 07	●	60712	60607	60652
Sierra 3500 HD	Excluding Cab & Chassis	11 - 19	●	60710	60607	60604
		07 - 10	●	60712	60607	60652
Ram						
1500	Coil springs, excluding Limited	11 - 18	●	60730	60607	60657
1500 Classic	Coil springs	19 - 23	●	60730	60607	60657
2500	--	11 - 13	●, 1, 2, 6	60732	60607	60661
3500	Excluding Cab & Chassis	11 - 12	●, 1, 2, 6	60732	60607	60661
Toyota						
Tundra	6.5' bed	07 - 21	●, 5	60751	60607	60667

All models: Brake, fuel and electrical lines may need to be loosened or repositioned. Heat shield requires modification or removal.

1. Passenger-side wheel well must be notched for frame rail access
2. Parking brake cable bracket may require relocation
3. Exhaust may have to be permanently lowered on 2005 and newer models
5. Ball cannot be turned over. Brake lines must be cable-tied (ties included)
6. Do not invert ball with heavy loads on two-wheel-drive models

● = No frame drilling required

30K GTW OVER-BED FOLDING BALL GOOSENECK HITCH

See adjacent page for folding ball application guide

- Folding ball design keeps truck bed free of obstructions
- Stainless steel safety pin and pivot spring prevent binding
- Permanently attached gooseneck ball
- Includes safety chain loops and grade-8 hardware
- Patents: #5,571,270; #5,755,452; #5,435,585

61052

How Folding Ball Works

Open storage cover

Lift T-handle and drop ball

Close cover to store ball

Part #	Description	Plate Size	Ball Size	Finish	GTW / Vertical Load
61052	Folding ball gooseneck hitch	12" x 14"	2-5/16"	Carbide black	30,000 / 7,500 lbs.

30K GTW OVER-BED FIXED BALL GOOSENECK HITCHES

See adjacent page for fixed ball application guide

- Reinforcement required to reach max gross trailer weight rating

65500

61100

Part #	Description	Plate Size	Ball Size	Finish	GTW / Vertical Load
65500	Flat plate with fixed trailer ball and two 1/2" forged D-rings	13" x 48"	2-5/16"	Carbide black	30,000 / 7,500 lbs.
61100	Flat plate with fixed trailer ball (safety chain hook-ups sold separately)	12" x 12"	2-5/16"	Carbide black	30,000 / 7,500 lbs.

30K GTW OVER-BED GOOSENECK APPLICATION GUIDE

- Up to 30,000 lbs. GTW (limited to vehicle capacities)
- Vehicle-specific design optimizes strength and installation time
- Constructed from high-strength, laser-cut steel for a precise fit
- Protected by a rust-resistant liquid A-coat
- Includes grade-8 mounting hardware

61301

Make / Model	Style	Years	Foot Notes	Folding Ball Hitch #	Fixed Ball Hitch #	Flat Plate Hitch #	Bracket #
Chevrolet / GMC							
Silverado / Sierra 1500	--	99 - 06	●	61052	61100	65500	61341
Silverado / Sierra 1500 Classic	--	07 - 07	●	61052	61100	65500	61341
Silverado / Sierra 2500	Excluding Cab & Chassis	99 - 04	●	61052	61100	65500	61341
Silverado / Sierra 2500 HD	--	11 - 19	●	61052	61100	65500	61301
		01 - 10	●	61052	61100	65500	61341
Silverado / Sierra 2500 HD Classic	--	07 - 07	●	61052	61100	65500	61341
Silverado / Sierra 3500	Excluding Cab & Chassis	01 - 06	●	61052	61100	65500	61341
Silverado / Sierra 3500 Classic	Excluding Cab & Chassis	07 - 07	●	61052	61100	65500	61341
Silverado / Sierra 3500 HD	Excluding Cab & Chassis	11 - 19	●	61052	61100	65500	61301
		07 - 10	●	61052	61100	65500	61341
Dodge							
Ram 1500	--	94 - 01	--	61052	61100	65500	61509
Ram 2500 / 3500	Excluding Cab & Chassis	94 - 02	--	61052	61100	65500	61509
Ford							
F-150	--	04 - 13	--	61052	61100	65500	61321
F-250 Super Duty	--	99 - 15	●	61052	61100	65500	61332
F-350 Super Duty	Excluding Cab & Chassis	99 - 15	●	61052	61100	65500	61332
F-450 Super Duty	Excluding Cab & Chassis	08 - 11	●	61052	61100	65500	61332

● = No frame drilling required

WELD-ON GOOSENECK BALL

- High-strength, ready-to-weld steel alloy
- Heat-treated for optimum durability
- Tested to U.S. VESC V-5 specifications

Part #	GTW	Ball Size	Finish
40094	30,000 lbs	2-5/16"	Raw

20K GTW X5™ GOOSENECK TO 5TH WHEEL ADAPTER PLATES

The X5 adapter plate allows a gooseneck hitch to become a mounting platform for a 5th wheel hitch. The X5 shank simply drops into the gooseneck ball hole and instantly provides a set of industry-standard 5th wheel base rails. See the table below for gooseneck hitch compatibility.

For more information about mounting a 5th wheel hitch, see page 196.

Product Details

- Converts a gooseneck hitch into a set of standard 5th wheel base rails
- No assembly or tools required – just drop it in, lock it and go
- For use with CURT and competitive 5th wheels up to 20,000 lbs.
- Capacity limited to lowest-rated towing component
- Accepts any standard CURT 5th wheel legs or roller (excludes OEM puck system)
- Durable carbide black powder coat finish
- Co-cured in a rust-resistant liquid A-coat
- **Not compatible with OEM-style gooseneck hitches or turret-style pin boxes, such as Sidewinder™ or Turning Point™**
  (Trademark of First Brands Group™)

16210 - Fits CURT original Double Lock

16220 - Fits CURT Double Lock EZr

16310 - Fits B&W Turnoverball

Part #	Fits	Capacity	Shank Style
16210	CURT Double Lock 60607 and 60615	20,000 lbs.	Round shank
16220	CURT Double Lock EZr 60611 and 60619	20,000 lbs.	Round shank
16310	B&W Turnoverball® (excl. shallow models; shank hole is 2-1/4" from plate surface)	20,000 lbs.	Square shank

5TH WHEEL RAIL OPTIONS

5TH WHEEL RAIL GOOSENECK HITCHES

See page 213 to select custom 5th wheel brackets

- Allows pickup trucks equipped with 5th wheel rails to tow gooseneck trailers
- Mounts to all industry-standard 5th wheel rails
- Four-pin installation and removal for easy truck bed access
- #16055 can be positioned over the axle or rotated to provide a 3" rearward offset
- Includes safety chain hookups, pins & clips
- Durable carbide powder coat finish
- Tested for safety in accordance with SAE J2638
- Branded, retail friendly brown box

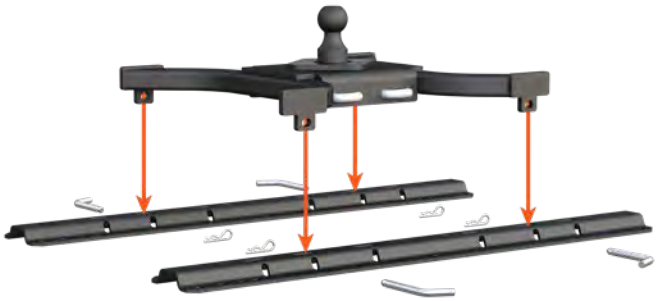

16090

16085

16055

Part #	Description	GTW	Ball Size	Finish
16090*	Spyder™ gooseneck hitch	30,000 lbs.	2-5/16"	Dark grey teridium
16085	Spyder™ gooseneck hitch	25,000 lbs.	2-5/16"	Carbide black
16055	Bent plate gooseneck hitch with 3" offset	25,000 lbs.	2-5/16"	Carbide black
23256	Base rail lock	--	--	Black powder-coated aluminum

23256

* Requires base rail #16205 to reach 30K capacity, see page 213 for custom 5th wheel brackets and ratings

GOOSENECK ELECTRICAL

CUSTOM WIRING EXTENSION HARNESSES

- Routes a 7-way RV blade socket into truck bed while retaining use of rear socket
- Simple plug-and-play design eliminates the need for cutting or splicing
- Allows for easy connection of gooseneck wiring
- Requires 2-1/8" hole saw for installation
- Neoprene well nuts isolate steel bolts from aluminum surfaces (select models)
- See page 156 for more information

56070 (7') / 56000 (10')

56071 (7') / 56001 (10')

Right-angle plug for easy installation

7' routes socket into rear of the truck bed

10' routes socket closer to truck cab

7-WAY RV BLADE EXTENSION HARNESS

- Routes existing 7-way RV blade socket into full-size pickup truck bed (7' length)
- Universal size fits any 7-way RV blade socket
- Allows for easy connection of gooseneck wiring
- See page 158 for more information

56080

REPLACEMENT 7-WAY RV BLADE HARNESSES

- Replaces the trailer-end plug of any 7-way harness
- Wires protected by heavy-duty, weather-resistant cable
- Cold-weather harnesses feature soft thermoplastic elastomer casing to remain flexible in cold temperatures (temperature rating from -40˚F up to 221˚F)
- See page 159 for more information

56602

56612

BRAKE CONTROLLERS

For a full list of benefits see pages 138 - 141

- Easily calibrated for all towing needs
- Proportional and time-delay units available
- Compatible with electric over hydraulic couplers

51200

Echo® in-line
Hidden under vehicle
Bluetooth-enabled
Smartphone-ready

51190

Echo® under-dash
Hidden under dash
Bluetooth-enabled
Smartphone-ready

51180

Echo® mobile
Portable design
Bluetooth-enabled
Smartphone-ready

51170

Spectrum™
Integrated OE look
Hidden main body
Tri-color LED display

51160

Assure™
Full text readout
Tri-axis sensitivity
Adjustable screen

NEW

51146

TriFlex™ NEXT
Tri-axis sensitivity
Auto adjustment
Digital display

NEW

51126

Discovery™ NEXT
Time-delay
Adjustable output
Digital display

NEW

51116

Venturer™ NEXT
Time-delay
Adjustable output
Ramp-up LED display

Dynamic power adjustment

Applies to Echo, Spectrum, Assure and TriFlex

Automatic power reduction for incline

Automatic power increase for decline

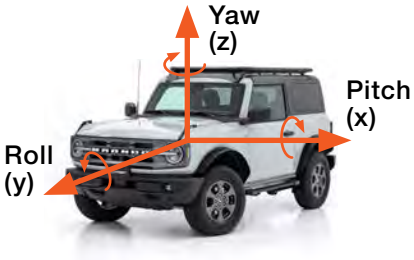

Tri-axis circuit detects inertia on three planes for greater sensitivity over dual-axis models

Note: Values represented are for illustration only. The actual preset and adaptive values may differ from those shown here.

Name	Pkg #	Axles	Brakes	Activation Method	Display	Mount Angle	Sleep Mode	Electric Over Hydraulic	Warranty
Echo in-line	51200	1 - 4	2 - 8	Proportional	Phone app	Any	Yes	Yes	Ltd lifetime
Echo under-dash	51190	1 - 4	2 - 8	Proportional	Phone app	Any	Yes	Yes	Ltd lifetime
Echo mobile	51180	1 - 2	2 - 4	Proportional	Phone app	Any	N/A	Yes	Ltd lifetime
Spectrum	51170	1 - 4	2 - 8	Proportional	Tri-color LED	Any	N/A	Yes	Ltd lifetime
Assure	51160	1 - 4	2 - 8	Proportional	OLED screen	-20° to +70°	Yes	Yes	Ltd lifetime
TriFlex NEXT	51146 N	1 - 4	2 - 8	Proportional	LED digital	Any	Yes	Yes	Ltd lifetime
Discovery NEXT	51126 N	1 - 4	2 - 8	Time-delay	LED digital	Any	Yes	Yes	Ltd lifetime
Venturer NEXT	51116 N	1 - 3	2 - 6	Time-delay	LED digital	Any	Yes	Yes	Ltd lifetime

REPLACEMENT PARTS

OEM PUCK SYSTEM KIT REPLACEMENT PARTS

19250

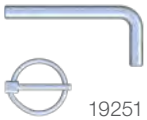
19251

66155

Part #	Description	Fits
66155	Rubber puck hole cover	All puck system center holes
19250	Anchor pin & lynch pin, qty 1 (Fits Ram)	60617, 60618, 60638, 60698
19251	Anchor pin & lynch pin, qty 1 (Fits Chevrolet, Ford, GMC, Nissan)	60691, 60692, 60639, 60691

OEM-STYLE HITCH REPLACEMENT PARTS

66155

60601

60629 & 60627

60628 & 60634

Part #	Description	GTW / Vertical Load	Ball Size	Rise	Fits
66155	Rubber puck hole cover	--	--	--	All
60601	OEM-style ball	30,000 / 7,500 lbs.	2-5/16"	1/2"	All
60629	OEM-style ball	30,000 / 7,500 lbs.	2-5/16"	1-5/8"	All
60628	OEM-style ball	30,000 / 7,500 lbs.	3"	1-5/8"	All
60627	OEM-style ball	38,000 / 9,500 lbs.	2-5/16"	1-5/8"	All
60634	OEM-style ball	38,000 / 9,500 lbs.	3"	1-5/8"	All

ROCKERBALL™ GOOSENECK BALL REPLACEMENT PART

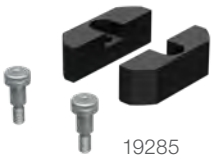
19285

Part #	Description	Fits
19285	Adapter kit for B&W hitches	60654

EZR™ & ORIGINAL DOUBLE LOCK REPLACEMENT PARTS

Fig #	Part #	Description	Fits
1	19253	Center locator	EZr
2	19254	Safety chain U-bolt spring kit - 5/8" U-bolts, qty 2 - U-bolt spring, qty 4 - 5/8" flat washers, qty 8 - 5/8" nylock nuts, qty 4	EZr
3	19260	Safety chain U-bolt spring kit - 1/2" U-bolts, qty 2 - U-bolt spring, qty 4 - 1/2" flat washers, qty 8 - 1/2" nylock nuts, qty 4	Original
4	19255	Handle assembly - #10 hex flange screw, qty 1 - #10 nylock nut, qty 1 - Handle rod, qty 1 - Handle grip, qty 1	EZr & original
5	19256	Chrome trim ring with hardware	EZr & original
6	19257	Handle spring with two washers	EZr & original
7	19258	Locking pin with hardware	EZr & original
8	19259	5/16" cylinder guide pin	EZr & original
9	66165	Rubber hole cover	EZr & original
10	60616	Gooseneck ball, 2-5/16"	EZr & original

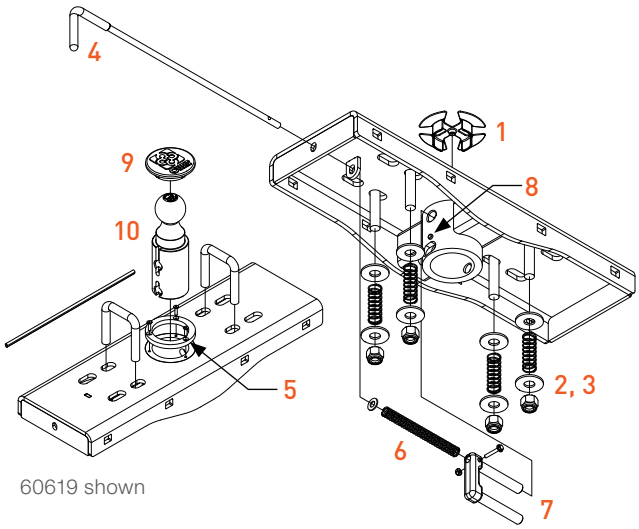

60619 shown

OVER-BED HITCH REPLACEMENT PARTS

Part #	Description	Fits
66123	T-handle	61052
19260	Safety chain U-bolt spring kit - 1/2" U-bolts, qty 2 - U-bolt spring, qty 4 - 1/2" flat washers, qty 8 - 1/2" nylock nuts, qty 4	61052
66113	Safety chain U-bolt spring kit - 5/8" U-bolts, qty 2 - U-bolt spring, qty 4 - M16 flat washers, qty 4 - 5/8" nylock nuts, qty 4	61100

66123

19260

66113

5TH WHEEL RAIL HITCH REPLACEMENT PARTS

Part #	Description	Fits
16902	Pin & clip, qty 4	16090, 16085, 16055

16902

TRAILER PARTS & ACCESSORIES

FEATURED PRODUCTS

Trailer axle components

CURT offers a full lineup of Lippert brake assemblies, leaf springs, brake hardware and genuine Lippert axle replacement parts.

QuickPin™ couplers

With it's innovative design, QuickPin™ allows fast, hassle-free trailer coupling with just one pin. No need for hinge components!

HD rubber wheel chocks

Quickly stow away your wheel chocks and save space with our all-new design that allows for mounting the chocks on the trailer frame.

PRODUCT INDEX

266 QuickPin™ Couplers

267 Couplers & Accessories

270 Channels & Lunette Rings

272 Jacks & Accessories

276 Hand Winches & Straps

277 Cargo Straps

278 Safety Chains & Cables

281 Hooks & Links

284 Rings & Tie-Down Anchors

286 Wheel Chocks

287 Wheel Bearing Components

288 Trailer Axle Components

Scan to learn more

HASSLE-FREE, LATCH-FREE, ONE-PIN COUPLING.

QUICKPIN™ NO-LATCH TRAILER COUPLERS

- Fastens securely with included hitch pin and clip (only compatible with included pin or accepted locks; see table)
- Lasso lanyard secures pin to coupler to avoid missing pieces
- 50° A-frame angle to fit most A-frame trailers (#25474 only)
- Bolt-on or weld-on installation for versatile mounting options (trailer mounting hardware not included)
- Passes SAE J684 performance testing
- Patent pending

See table below for accepted hitch locks

25474

25470

25471

25472

Latchless, one-pin coupling is easier to use than traditional couplers

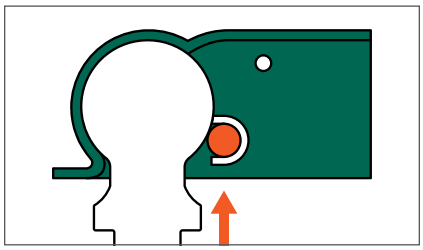
Innovative design allows fast, hassle-free trailer hookup with just one pin

No jamming or complicated hinging components prone to wear or adjustments

Part #	Class	GTW / TW	Ball Size	Mounting Style	Finish	Accepted Locks (see page 112)
25470	2	3,500 / 350 lbs.	2"	2" channel	Gloss black	23020, 23024, 23501, 23517 and 23506
25471	2	3,500 / 350 lbs.	2"	2-1/2" channel	Gloss black	23020, 23024, 23501, 23517 and 23506
25472	2	3,500 / 350 lbs.	2"	3" channel	Gloss black	23020, 23024, 23501, 23517 and 23506
25474	4	14,000 / 1,400 lbs.	2-5/16"	A-frame	Gloss black	23021, 23025 (replace included 5/8" pin) 23022, 23521, 23546 (fit included pin hole)

STRAIGHT-TONGUE & A-FRAME COUPLERS

For a selection of coupler locks go to pages 113 & 114

- Sleeve-lock latch system for optimum security (#25217, #25227)
- Spring and nut posi-lock mechanism allows for easy adjustment (select models)
- Features holes to accept a safety pin or coupler lock
- Constructed from high-strength steel
- Protected by a durable zinc-plated or gloss black powder coat finish
- Tested for safety in accordance with SAE J684

25200

25105

25128

25131

25153

25135

25138

25100

25227

25217

25210

25101

Part #	Class	GTW / TW	Ball Diameter	Latch Style	Channel Width	Finish
Straight-Tongue Couplers						
25105	1	2,000 / 200 lbs.	1-7/8"	Posi-lock	2-1/2"	Zinc-plated
25128	1	2,000 / 200 lbs.	1-7/8"	Posi-lock	2"	Zinc-plated
25131	1	2,000 / 200 lbs.	1-7/8"	Posi-lock	3"	Zinc-plated
25153	2	3,500 / 500 lbs.	2"	Posi-lock	2"	Zinc-plated
25135	2	3,500 / 500 lbs.	2"	Posi-lock	2-1/2"	Zinc-plated
25138	2	3,500 / 500 lbs.	2"	Posi-lock	3"	Zinc-plated
25100	3	5,000 / 700 lbs.	2"	Posi-lock	3"	Zinc-plated
A-Frame Couplers						
25101	3	5,000 / 700 lbs.	2"	Posi-lock	--	Zinc-plated
25210	3	5,000 / 700 lbs.	2"	Posi-lock	--	Gloss black
25217*	4	7,000 / 1,050 lbs.	2"	Sleeve-lock	--	Gloss black
25200	4	10,000 / 1,500 lbs.	2-5/16"	Easy-lock	--	Gloss black
25227*	4	12,500 / 1,875 lbs.	2-5/16"	Sleeve-lock	--	Gloss black

* Solid neck for increased strength and greater corrosion resistance

Spring and nut posi-lock mechanism allows for easy adjustment (select models)

CHANNEL-MOUNT COUPLERS

For a selection of coupler locks go to pages 113 & 114

- Compatible with CURT channels #48610 and #48650, see page 270
- Secured by a dual-bolt mounting system
- Channel-mount allows for easy height adjustment
- Safety pin hole can also accept a coupler lock
- Constructed from heavy-duty cast steel
- Protected by a durable black powder coat finish

25319

25329

25330

25328

Part #	GTW / TW	Ball Diameter	Latch Style
25319*	7,000 / 1,050 lbs.	2"	Sleeve-lock
25329*	12,500 / 1,875 lbs.	2-5/16"	Sleeve-lock
25330	14,000 / 2,100 lbs.	2-5/16"	Easy-lock
25328	15,000 / 2,250 lbs.	2-5/16"	Easy-lock

* Solid neck for increased strength and greater corrosion resistance

SAFETY PINS

For master and inner pack quantities see page 341

- Quickly secures coupler latches, pintle hooks, jack legs or caster wheels
- Square retainer wire clip provides added clearance
- Durable zinc-plated finish

25034 25035

28000 28001

25080 25081

25010 25011

28278 28279

25012 25013

Bulk #	Pkg #	Pin Diameter	Pin Length	Chain Length
25080	25081	1/4"	2-3/4"	--
25012	25013	1/4"	2-3/4"	12" chain
25010	25011	5/16"	3"	--
25034	25035	5/16"	3"	12" chain
28278	28279	3/8"	2-3/4"	--
28000	28001	3/8"	3"	12" chain

25034 securing a coupler latch

28278 securing a jack foot

SecureLatch™ lunette eye

QuickPin™ coupler

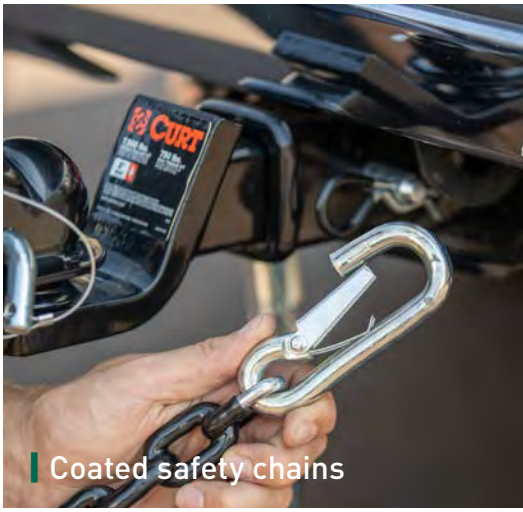

Coated safety chains

SECURELATCH™ FLUSH-MOUNT LUNETTE RING

For pintles and mounts go to page 120

- Vertically offset base allows ring to be flipped for maximum height adjustment
- Drop-in pin accepts lock to deter theft (turns 90 degrees while coupled)
- Cast iron construction is austempered for superior strength and wear resistance
- Textured, dark grey teridium finish for a premium look on your vehicle
- Yellow zinc-plated pin for long-lasting corrosion resistance

48661

Drop-in pin accepts lock to deter theft (turns 90° while coupled)

Part #	GTW	Rings Hole Size	Ring Thickness	Bolt Hole Spacing	Base Size
48661	60,000 lbs.	2-1/2" I.D.	1-1/2"	4-1/2" center to center	6-1/4" square

SECURELATCH™ CHANNELS & LUNETTE RINGS

Scan to learn more

- Drop-in pin accepts lock to deter theft (turns 90 degrees while coupled)
- Strong 2-hole bolt pattern fits 3" channel only (#48625)
- Heavy-duty 3-hole bolt pattern fits 2-3/4" channel only (#48626)
- Cast iron construction for superior strength and wear resistance
- Hardware included with #48641 kit only
- Textured, dark grey teridium finish for a premium look on your vehicle (lunette rings only)
- Raw finish for immediate welding (channels only)
- Yellow zinc-plated pin for long-lasting corrosion resistance
- U.S. patent# 5,527,356; Canadian patent# 2,823,001; Australian patent# 2014305601

48625

48626

48641

48651

48610

48650

Bulk #	Pkg #	GTW	Number of Positions	Ring Hole Size	Ring Thickness	Vertical Hole Spacing	Channel Width	Channel Height	Description
--	48625	25,000 lbs.	--	3" I.D.	1-1/2"	2" on center	3" I.D.	--	Lunette ring only
--	48626	40,000 lbs.	--	3" I.D.	1-1/2"	2" on center	2-3/4" I.D.	--	Lunette ring only
--	48641	40,000 lbs.	4-position	3" I.D.	1-1/2"	2" on center	2-3/4" I.D.	11-3/4"	Lunette ring and channel
48651	--	--	4-position	--	--	2" on center	2-3/4" I.D.	11-3/4"	Channel fits 48626 only
48610	--	--	3-position	--	--	2" on center	3" I.D.	7-1/2"	Channel only
48650	--	--	5-position	--	--	2" on center	3" I.D.	11-3/4"	Channel only

FORGED LUNETTE RINGS

- Single stud eliminates need for a swivel-type pintle hook (#48520, #48530)
- Threaded shank and castle nut for secure attachment to trailer (#48520, #48530)
- Flat design allows drawbar to bolt quickly and easily to a trailer tongue (#48510)
- Constructed from forged steel alloy for superior strength

48520

48530

48510

48550

48560

Bulk #	Pkg #	GTW	Mount-Style	Eye Hole Size	Ring Thickness	Finish
48520	--	15,000 lbs.	39mm stud with castle nut	2-1/2" I.D.	1-1/2"	Black
48530	--	45,000 lbs.	48mm stud with castle nut	3" I.D.	1-5/8"	Black
48510	--	22,000 lbs.	3" x 13" x 1-5/8" drawbar with seven-bolt holes	3" I.D.	1-5/8"	Black
--	48550	35,000 lbs.	6" x 6" flush plate with 4-1/2" center to center holes	2-1/2" I.D.	1-1/2"	Black
--	48560	60,000 lbs.	6" x 6" flush plate with 4-1/2" center to center holes	3" I.D.	1-1/2"	Black

CHANNELS & FORGED LUNETTE RINGS

- Height adjustment allows for precise trailer leveling
- Constructed from forged steel for superior strength (rings only)
- Constructed from one-piece, formed steel (channels only)

48660

48601

48660

48610

48650

48631 48630

48640

Bulk #	Pkg #	GTW	Number of Positions	Eye Hole Size	Bolt Hole Spacing	Channel Width	Channel Height	Description	Finish
48600	--	12,000 lbs.	--	3" I.D.	--	--	--	Forged ring	Raw
48601	--	12,000 lbs.	--	3" I.D.	--	--	--	Forged ring	Gloss black
48660	--	24,000 lbs.	--	3" I.D.	--	--	--	Forged ring	Raw
48631	48630	12,000 lbs.	3-position	3" I.D.	2" on center	3" I.D.	7-1/2"	Forged ring with formed channel	Raw
48610	--	--	3-position	--	2" on center	3" I.D.	7-1/2"	Formed channel	Raw
48650	--	--	5-position	--	2" on center	3" I.D.	11-3/4"	Formed channel	Raw
48640	--	12,000 lbs.	5-position	3" I.D.	2" on center	3" I.D.	11-3/4"	Forged ring with formed channel	Raw

2 INCH A-FRAME JACKS

- Top- and side-wind handles easily raise or lower trailer coupler

Designed to be mounted on an A-frame trailer tongue

Can be bolted or welded on (hardware not included)

28204 side-wind

28255 top-wind

28203 top-wind

Bulk #	Pkg #	Lift Capacity	Wind	Travel	Bracket Ht.	Handle Type	Retracted Ht.	Extended Ht.	Finish
28200	--	2,000 lbs.	Top	14-1/4"	8"	Straight	8-1/4"	22-1/2"	Gloss black
28202	28203	2,000 lbs.	Top	14-3/4"	9"	Straight	9-1/4"	24"	Gloss black
28204	--	2,000 lbs.	Side	15"	9"	Straight	9-1/4"	24-1/4"	Gloss black
28250	--	5,000 lbs.	Top	14-1/8"	10-1/2"	Straight	10-3/8"	24-1/2"	Gloss black
25007	--	5,000 lbs.	Top	15"	10-1/2"	Claw	10"	25"	Gloss black

2 INCH SWIVEL JACKS

- Top- and side-wind handles easily raise or lower trailer coupler
- Swivel bracket allows jack to fully swing up and out of the way

Bracket-mount pull-pin keeps jack securely locked in place

Raw socket included for welding onto the trailer

28302 bracket-mount

28354 pipe-mount

28351 pipe-mount

Bulk #	Pkg #	Lift Capacity	Wind	Travel	Hole Size	Handle Type	Style	Retracted Ht.	Extended Ht.
28320	--	2,000 lbs.	Top	10-3/4"	9/16"	Claw	Pipe-mount	11"	21-3/4"
25006	--	5,000 lbs.	Top	10"	9/16"	Claw	Pipe-mount	11-1/4"	21-1/4"
--	28351	5,000 lbs.	Top	10-3/4"	9/16"	Claw	Pipe-mount	11-1/2"	21-1/2"
28356	--	5,000 lbs.	Top	15"	5/8"	Claw	Pipe-mount	16-1/2"	31-1/2"
28322	28323	2,000 lbs.	Top	15"	9/16"	Claw	Pipe-mount	16"	31"
28321	--	2,000 lbs.	Side	10"	9/16"	Straight	Pipe-mount	17-1/2"	28-1/2"
28354	--	5,000 lbs.	Side	10"	5/8"	Straight	Pipe-mount	10-1/4"	20-1/4"
25005	--	3,500 lbs.	Side	15"	5/8"	Straight	Pipe-mount	15-1/2"	30-1/2"
28324	--	2,000 lbs.	Side	15"	9/16"	Straight	Pipe-mount	15-1/4"	30-1/8"
28300	28301	2,000 lbs.	Top	10-1/2"	--	Claw	Bracket-mount	11-1/2"	21-1/2"
28302	--	2,000 lbs.	Side	10"	--	Straight	Bracket-mount	10"	20-1/2"
28304	--	2,000 lbs.	Top	15-1/4"	--	Claw	Bracket-mount	16"	31-1/4"
28306	--	2,000 lbs.	Side	14-1/2"	--	Straight	Bracket-mount	15-1/2"	30"

BUILT-IN WHEEL FOR CONVENIENT MOBILITY

2 INCH MARINE JACKS

- Caster wheel for trailer mobility and easier coupling
- Bolt-on hardware included for secure mounting

Swivel bracket allows jack to fully swing up during travel

Heavy-duty pull-pin locks jack securely in place

25004

28115

28156

Bulk #	Pkg #	Lift Capacity	Wind	Travel	Bracket Ht.	Wheel Size	Retracted Ht.	Extended Ht.	Finish
25004	25003	1,000 lbs.	Side	10"	12-1/4"	6"	9-1/4"	19-1/4"	Zinc-plated
28112	28113	1,200 lbs.	Side	11"	12-11/16"	6"	12-1/2"	23-1/2"	Zinc-plated
28115	28116	1,500 lbs.	Side	11"	12-11/16"	8"	13"	24"	Zinc-plated
28155	28156	1,500 lbs.	Side	10-3/8"	12-1/2"	Dual 6"	12-5/8"	23"	Zinc-plated

DIRECT-WELD SQUARE JACKS

- Designed to weld directly to the trailer frame
- Drop leg with spring return for fast retraction (#28512)
- Pull-pin keeps jack leg securely locked in place

28512

28570

28575

28359

Part #	Lift Capacity	Support	Wind	Travel	Handle Type	Inner Tube	Retracted Ht.	Extended Ht.	Incl. Jack Foot
28512	10,000 lbs.	12,000 lbs.	Side	12-3/8"	Straight	3-1/2"	28"	40-1/4"	Yes
28570	7,000 lbs.	8,000 lbs.	Top	15-1/4"	Claw	2-1/4"	24-1/4"	39-1/2"	Yes
28575	7,000 lbs.	8,000 lbs.	Side	15"	Straight	2-1/4"	24-3/4"	40-1/8"	Yes
28359	3,000 lbs.	5,000 lbs.	Side	15-1/4"	Straight	2"	24-5/8"	39-7/8"	No

2 INCH JACK ACCESSORIES

- Caster assemblies #28276 and #28277 are not designed as repair parts for marine jacks; use jack repair part number #28912

28270 28271

28273 28272

28275 28274

28277 28276

28278 28279

Bulk #	Pkg #	Description	Capacity	Fits Tube	Height	Wheel Size	Diameter
28270	28271	Pivoting jack foot, bolt-on	2,000 lbs.	2"	--	--	--
28272	28273	Jack foot	2,000 lbs.	2"	1-11/16"	--	--
28274	28275	Jack foot	2,000 lbs.	2"	8-1/2"	--	--
28276	28277	Caster assembly with poly wheel	1,200 lbs.	2"	--	6" x 2"	--
28278	28279	Safety pin	--	--	--	--	3/8"

QUICK DROP® DRILL-OPERATED A-FRAME JACK BY LIPPERT

- Fits most cargo, utility and travel trailers
- Includes manual hand crank for backup operation
- Do not use impact drill for operation
- Durable gloss black powder coat finish
- Removable jack foot for increased trailer stability
- Patent #10,463,161

Innovative 3/4" top nut allows jack to be raised or lowered with a power drill

Faster, easier operation with no hand cranking required

733926

Part #	Lift Capacity	Wind	Handle Type	Travel	Bracket Height	Retracted Height	Extended Height	Finish
733926	2,000 lbs.	Top	Straight	14"	8-1/2"	9-1/2"	23-1/2"	Gloss black

POWER YOUR JACK DIRECTLY FROM YOUR VEHICLE

POWER STANCE™ ELECTRIC A-FRAME JACK BY LIPPERT

- Raises and lowers trailer tongue using vehicle or trailer battery power
- Can be hardwired into trailer or plugged into any vehicle 7-way RV blade
- Four LEDs illuminate the area for easier nighttime setup
- Helical-cut gears reduce noise and improve operating efficiencies
- Enhanced rocker switch for improved durability and ease of operation
- Removable jack foot for increased trailer stability
- Includes emergency hand crank for manual backup
- Patent-pending

813749 813748

Power Swap cord connects to the vehicle, instead of draining the RV battery or hand cranking

Integrated chain hangers and 7-way inlet underneath the jack hood for convenient storage

Built-in LED lights shine down on the coupler making it easy to see and operate your jack at night

Equipped with an emergency manual crank option, so you will never be stranded

Part #	Lift Capacity	Travel	Bracket Height	Retracted Height	Extended Height	Main Body Material	Finish
813748	3,500 lbs.	18"	9"	10-5/8"	28-5/8"	UV-resistant black plastic	Gloss black
813749	Power Swap Auxiliary Cord for Power Stance tongue jack						

HAND WINCHES

- Constructed from high-strength, cold-forged steel
- Equipped with a locking lever for increased safety
- Broached pinion shaft securely engages the pinion gear
- Straps made from 2" wide, no-stretch nylon web
- Base features slotted screw holes for flexible mounting

Crank-style winches for boat trailers or hoisting applications

#25002 includes bow loop strap for jet ski trailers (#25002)

25002

29423

29433

29424

29435

29427

29428

Part #	Capacity	Gear Ratio	Hub Diameter	Handle Length	Strap Included	Bow Loop Included
25002	900 lbs.	3.25:1	3/4"	8"	Yes, 20'	Yes
29423	900 lbs.	3.25:1	3/4"	6-1/2"	No	No
29433	900 lbs.	3.25:1	3/4"	6-1/2"	Yes, 15' (29450)	No
29424	1,200 lbs.	4.2:1	3/4"	7-1/2"	No	No
29435	1,400 lbs.	4.2:1	3/4"	7-1/2"	Yes, 20' (29451)	No
29427*	1,700 lbs.	5.1:1	1"	8"	No	No
29428*	1,900 lbs.	5.1:1	1"	8"	No	No

* Continued while supplies last

WINCH STRAPS

- Made from 2" wide, no-stretch nylon web
- Zinc-plated snap hook for easy, secure hookup

Bulk #	Pkg #	Work Load	Break Strength	Strap Width	Strap Length
29007	--	1,333 lbs.	4,000 lbs.	2"	20'
--	29450	1,100 lbs.	3,300 lbs.	2"	15'
--	29451	1,100 lbs.	3,300 lbs.	2"	20'

29007

29450 & 29451

CARGO STRAPS

- Cambuckle mechanism allows for quick, direct tension on lighter loads
- Ratchet mechanism allows for greater tension on heavy loads
- High-strength, woven nylon
- Cinching components protected by a durable yellow zinc-plated finish

Perfect for securing cargo in trailers, truck beds and more

Secures cargo better than bungee cords or rope

83036

83047

83048

83015 83016

83001 83002

83009 83010

83019 83020

83025 83026

83027 83028

Part #	Work Load	Break Strength	Quantity	Color	Length	Width	Hook Style	Hook Finish	Mechanism
83015	300 lbs.	900 lbs.	2	Dark green	15'	1"	S-hook	Rubber-coated	Cambuckle
83016	300 lbs.	900 lbs.	4	Dark green	16'	1"	S-hook	Rubber-coated	Cambuckle
83001	500 lbs.	1,500 lbs.	2	Red	10'	1"	S-hook	Rubber-coated	Ratchet
83002	500 lbs.	1,500 lbs.	4	Red	16'	1"	S-hook	Rubber-coated	Ratchet
83009*	500 lbs.	1,500 lbs.	2	Black	10'	1"	S-hook	Rubber-coated	Ratchet
83010*	500 lbs.	1,500 lbs.	4	Black	16'	1"	S-hook	Rubber-coated	Ratchet
83019	733 lbs.	2,200 lbs.	1	Blue	16'	1"	J-hook	Rubber-coated	Ratchet
83020	733 lbs.	2,200 lbs.	2	Blue	16'	1"	J-hook	Rubber-coated	Ratchet
83025*	1,100 lbs.	3,300 lbs.	1	Orange	16'	1"	J-hook	Rubber-coated	Ratchet
83026*	1,100 lbs.	3,300 lbs.	2	Orange	16'	1"	J-hook	Rubber-coated	Ratchet
83027	1,100 lbs.	3,300 lbs.	1	Lime green	16'	1"	S-hook	Rubber-coated	Ratchet
83028	1,100 lbs.	3,300 lbs.	2	Lime green	16'	1"	S-hook	Rubber-coated	Ratchet
83036	1,667 lbs.	5,000 lbs.	1	Yellow	14'	1-1/2"	J-hook	Yellow zinc-plated	Ratchet
83047	3,333 lbs.	10,000 lbs.	1	Yellow	27'	2"	J-hook	Yellow zinc-plated	Ratchet
83048	3,333 lbs.	10,000 lbs.	1	Yellow	27'	2"	Flat hook	Yellow zinc-plated	Ratchet

* Continued while supplies last

MAKE SAFETY A PRIORITY WHEN YOU TOW

PROPER SAFETY CHAIN USAGE

Safety chains are required by law and should be crossed under the tongue of the trailer so that the tongue will not drop to the road if it becomes separated from the hitch. Always leave enough slack so the vehicle can safely turn. Never allow the safety chains to drag on the ground and never attach the chains to the bumper.

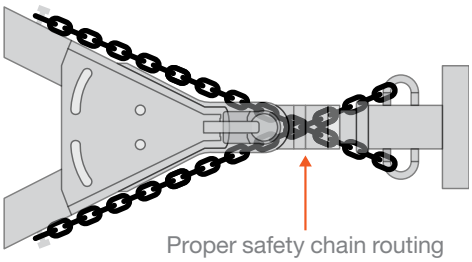

Proper safety chain routing crosses under the coupler

SAFETY CHAINS WITH S-HOOKS

S-hook

Helps resist total vehicle-trailer separation during a disconnect

80020

80011 80010

80040

80031 80030

80300

80301

Bulk #	Pkg #	Break Strength	Number of Chains	Total Length	Chain Length	Link Diameter	Hooks Per Chain	Hook Opening	Grade	Finish
80020	--	2,000 lbs.	1	27"	23"	3/16"	1 (81260)	3/8"	30	Zinc-plated
80010	80011	2,000 lbs.	1	48"	40"	3/16"	2 (81260)	3/8"	30	Zinc-plated
80040	--	5,000 lbs.	1	27"	23"	1/4"	1 (81270)	7/16"	30	Zinc-plated
80030	80031	5,000 lbs.	1	48"	40"	1/4"	2 (81270)	7/16"	30	Zinc-plated
80300	--	7,000 lbs.	1	27"	23"	8/0	1 (81620)	17/32"	30	Zinc-plated
80301	--	7,000 lbs.	1	48"	40"	8/0	2 (81620)	17/32"	30	Zinc-plated

Federal law requires safety chains or cables to be secured while towing. Each individual chain or cable must meet or exceed the trailer weight.

SAFETY CHAINS WITH SNAP HOOKS

- Spring-loaded safety latch helps ensure secure attachment
- Protected by a durable zinc-plated finish
- Vinyl coating protects chains from rust and allows for easier handling (#19749)

19749

80312

80313

Snap hook

Helps resist total vehicle-trailer separation during a disconnect

Bulk #	Pkg #	Break Strength	Number of Chains	Total Length	Chain Length	Link Diameter	Hooks Per Chain	Hook Opening	Grade	Finish
80312	--	2,000 lbs.	1	27"	24"	3/16"	1 (81266)	3/8"	30	Zinc-plated
80313	--	5,000 lbs.	1	27"	24"	1/4"	1 (81277)	7/16"	30	Zinc-plated
--	19749	5,000 lbs.	2	65"	60"	1/4"	2 (81260)	7/16"	30	Zinc-plated with rubber coating

TRAILER SAFETY CHAIN HOLDER BRACKETS

- Provides intermediate hangers to keep safety chains off the ground (not intended as a safety chain secure point)
- Requires clearance on the shank between receiver collar and accessory (see table)
- Hooks maintain proper safety chain function for trailer disconnect

45807 45806

Provides intermediate hangers to keep chains off the ground

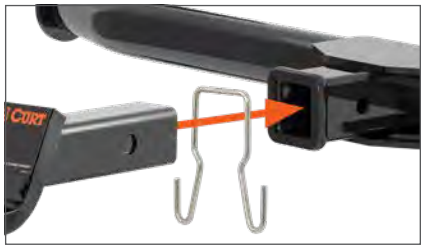

Easily clips onto most 2" shanks (#45807)

Part #	Fits	Style	Required Clearance	Includes	Finish
45806	2" shanks	Bolt-on	5/8"	Bracket and hardware	Yellow zinc-plated
45807	2" shanks	Clip-on	1/4"	Bracket only	Stainless steel

Federal law requires safety chains or cables to be secured while towing. Each individual chain or cable must meet or exceed the trailer weight.

SAFETY CABLES WITH SAFETY LATCH HOOKS

- Coiled design keeps cables from dragging on the ground
- Nylon coating protects cables from rust and allows for easier handling
- Assembled with two safety latch hooks for secure attachment

Safety latch S-hook

Helps resist total vehicle-trailer separation during a disconnect

80136

80151

80176

Part #	Break Strength	Number of Cables	Total Length	Cable Length	Cable Diameter	Hooks Per Cable	Hook Opening	Cable Finish	Hook Finish
80136	3,500 lbs.	2	43-7/8"	40-1/2"	1/4"	2 (81810)	3/8"	Nylon-coated	Zinc-plated
80151	5,000 lbs.	2	44-1/2"	40-1/2"	5/16"	2 (81820)	7/16"	Nylon-coated	Zinc-plated
80176	7,500 lbs.	2	44"	39-3/4"	3/8"	2 (81830)	17/32"	Nylon-coated	Zinc-plated

SAFETY CHAINS WITH SAFETY LATCH CLEVIS HOOKS

- Exclusive clevis design and spring-loaded safety latch help ensure secure attachment
- Hooks constructed from high-strength, heat-treated, forged steel
- Protected by a durable zinc-plated finish

Zinc-plated

Yellow zinc-plated

Safety latch clevis hooks

Helps resist total vehicle-trailer separation during a disconnect

Part #	Break Strength	Number of Chains	Total Length	Chain Length	Link Diameter	Hooks Per Chain	Hook Opening	Grade	Chain Finish	Hook Finish
80302	7,800 lbs.	1	35"	32"	1/4"	1 (81900)	1/4"	43	Zinc-plated	Yellow zinc-plated
80314	11,700 lbs.	1	35"	32"	5/16"	1 (81550)	5/16"	43	Zinc-plated	Yellow zinc-plated
80303	12,600 lbs.	1	35"	32"	1/4"	1 (81940)	1/4"	70	Yellow zinc-plated	Yellow zinc-plated
80315	16,200 lbs.	1	35"	31"	3/8"	1 (81560)	3/8"	43	Zinc-plated	Yellow zinc-plated
80304	18,800 lbs.	1	35"	32"	5/16"	1 (81950)	5/16"	70	Yellow zinc-plated	Yellow zinc-plated
80316	24,000 lbs.	1	35"	31"	3/8"	1 (81960)	3/8"	70	Yellow zinc-plated	Yellow zinc-plated

TIE-DOWN AND BIND YOUR HEAVY-DUTY CARGO

TRANSPORT BINDER SAFETY CHAINS

- Grade-70 rating for superior tensile strength and abrasion resistance
- Assembled with two clevis grab hooks for secure attachment
- Durable yellow zinc-plated finish
- Do not exceed work load limit

80306

80307

Part #	Work Load	Break Strength	Total Length	Chain Length	Link Diameter	Hooks Per Chain	Hook Opening	Grade	Finish
80305	4,700 lbs.	18,800 lbs.	14'	162"	5/16"	2 (81503)	5/16"	70	Yellow zinc
80306	4,700 lbs.	18,800 lbs.	16'	186"	5/16"	2 (81503)	5/16"	70	Yellow zinc
80307	4,700 lbs.	18,800 lbs.	20'	234"	5/16"	2 (81503)	5/16"	70	Yellow zinc
80308	4,700 lbs.	18,800 lbs.	25'	294"	5/16"	2 (81503)	5/16"	70	Yellow zinc
80309	6,600 lbs.	26,400 lbs.	14'	162"	3/8"	2 (81438)	3/8"	70	Yellow zinc
80310	6,600 lbs.	26,400 lbs.	16'	186"	3/8"	2 (81438)	3/8"	70	Yellow zinc
80311	6,600 lbs.	26,400 lbs.	20'	234"	3/8"	2 (81438)	3/8"	70	Yellow zinc

CLEVIS GRAB HOOKS

- Meets requirements for high-test chain
- Can also be used to connect safety chains from trailer to tow vehicle
- Constructed from high-strength, forged steel

81330

81502

81340

81503

81350

81438

Part #	GTW	Hook Opening	Grade	Pin Diameter	Finish
81330	2,600 lbs.	1/4"	43	3/8"	Zinc-plated
81502	3,150 lbs.	1/4"	70	3/8"	Yellow zinc-plated
81340	3,900 lbs.	5/16"	43	7/16"	Zinc-plated
81503	4,700 lbs.	5/16"	70	7/16"	Yellow zinc-plated
81350	5,400 lbs.	3/8"	43	1/2"	Zinc-plated
81438	6,600 lbs.	3/8"	70	1/2"	Yellow zinc-plated

Used on transport binder safety chain to tie down heavy cargo

Federal law requires safety chains or cables to be secured while towing.
Each individual chain or cable must meet or exceed the trailer weight.

SAFETY LATCH CLEVIS HOOKS

- Quickly and easily connects safety chains from trailer to tow vehicle
- Exclusive design and spring-loaded safety latch help ensure secure attachment
- Meets requirements for high-test (grade 40), transport (grade 70) or alloy chain (grade 80)
- Hook pin and cotter pin provide an easy, secure attachment to safety chain
- Built from high-strength, heat-treated, forged steel
- Protected by a durable yellow zinc-plated finish

Part #	GTW	Hook Opening	Grade	Pin Diameter
81900	7,800 lbs.	1/2"	43	5/16"
81940	12,600 lbs.	1/2"	70	5/16"
81550	14,000 lbs.	3/4"	43	3/8"
81950	18,000 lbs.	3/4"	70	3/8"
81560	18,000 lbs.	1"	43	7/16"
81960	24,000 lbs.	1"	70	7/16"
81970	40,000 lbs.	1-1/3"	80	17/32"
81910	35,000 lbs.	1-1/4"	43	5/8"
81980	48,000 lbs.	1-1/4"	80	5/8"
81920	65,000 lbs.	1-1/4"	80	3/4"

81900

81940

81550

81950

81560

81960

81970

81910

81980

81920

CERTIFIED S-HOOKS

- Quickly and easily connects safety chains from trailer to tow vehicle
- Tested for safety in accordance with SAE J684
- Wire safety latch helps ensure secure attachment
- Strong, heat-treated steel with a zinc-plated finish

Part #	GTW	Hook Opening	Safety Latch
81260	2,000 lbs.	3/8"	No
81810	2,000 lbs.	3/8"	Yes
81640	3,500 lbs.	13/32"	No
81840	3,500 lbs.	13/32"	Yes
81270	5,000 lbs.	7/16"	No
81820	5,000 lbs.	7/16"	Yes
81620	7,600 lbs.	17/32"	No
81830	7,600 lbs.	17/32"	Yes

81810

81260

81840

81640

81820

81270

81830

81620

SNAP HOOKS

For master and inner pack quantities see page 341

- Quickly and easily connects safety chains from trailer to tow vehicle
- Spring-loaded safety latch helps ensure secure attachment
- Patent# 5,664,304

Bulk #	Pkg #	GTW	Diameter
81266	81261	2,000 lbs.	3/8"
81277	81271	5,000 lbs.	7/16"
81288	81281	5,000 lbs.	9/16"
81360	--	3,500 lbs.	5/8" eye

81266 81261 81277 81271 81288 81281 81360

QUICK LINKS

- Provides a quick connection for chains, cables, ropes or straps
- Threaded link ensures secure attachment with the option to disconnect later
- Requires no tools for installation
- Do not exceed work load limit

82610 82611 82900 82901 82903 82930 82933

Bulk #	Pkg #	Two-Pack #	Work Load	Diameter	Finish
82610	82611	--	880 lbs.	1/4"	Zinc
82900	82901	82903	1,760 lbs.	5/16"	Zinc
82930	82933	--	2,200 lbs.	3/8"	Zinc
82931	82934*	--	2,640 lbs.	7/16"	Zinc
82932	82935	--	3,300 lbs.	1/2"	Zinc

* Continued while supplies last

82931 82934 82932 82935

JOINING LINKS

- Constructed from 1038 steel
- Do not use for lifting
- Welding required

Part #	Finish	Size
82940	Raw	9/0
82942	Raw	7/16"
82944*	Zinc-plated	7/16"

* Continued while supplies last

82940 82942 82944

RINGS & TIE-DOWN ANCHORS

See adjacent page for part number table

Recessed rope rings

- Recessed design eliminates obstruction and provides a finished look
- Constructed from high-strength steel
- Mounting screws not included

83601

83710

83600

D-rings

- Constructed from high-strength steel
- Mounting screws not included

83740

83742

83732

83730

83731 two-pack

Backing plate

- Adds strength to tie-down anchors
- Constructed from high-strength steel
- Compatible with #83600, #83740 and #83742
- Mounting screws not included

83607

83740 & 83607

83600 & 83607

Trim ring

- Provides a clean, finished look for recessed plate #83710
- Helps protect plate edges from damage and corrosion

83720

83710 in 83720

Lashing rings

- Heavy-duty design with large opening offers a reliable anchoring point
- Raw finish allows for ready welding of mounting bracket
- Constructed from high-strength, forged steel

83750

83760

83770

83780

Adds attachment point to a trailer

RINGS & TIE-DOWN ANCHORS

Part #	Capacity	Break Strength	Finish	Base Size	Mount Hole Size	Mounting Hole Pattern	Ring I.D.	Ring Thickness
Recessed Rope Rings								
83710	1,000 lbs.	1,000 lbs	Zinc-plated	3-1/2" x 3-1/2"	1/4"	1-3/16"	1-1/8" x 1-5/8"	1/4"
83601	1,200 lbs.	1,200 lbs.	Zinc-plated	5" x 3-1/2"	1/4"	4-1/16" x 1/4"	1-3/8" x 1-7/8"	1/4"
83600	5,000 lbs.	7,000 lbs.	Zinc-plated	4-7/8" x 4-1/2"	3/8"	3-3/8" x 2-7/8"	1-1/2" x 1-1/2"	1/2"
D-Rings								
83730	1,200 lbs.	2,400 lbs.	Zinc-plated	2-1/4" x 13/16"	1/4"	1-1/2"	1" x 1-1/4"	1/4"
83731*	1,200 lbs.	2,400 lbs.	Zinc-plated	2-1/4" x 13/16"	1/4"	1-1/2"	1" x 1-1/4"	1/4"
83732	1,200 lbs.	2,400 lbs.	Stainless	2-1/4" x 13/16"	1/4"	1-1/2"	1" x 1-1/4"	1/4"
83740	3,600 lbs.	11,000 lbs.	Yellow zinc-plated	1-3/4" x 3-11/16" x 7/8"	7/16" square	2"	3" x 3"	1/2"
83742	3,600 lbs.	11,000 lbs.	Zinc-plated	1-3/4" x 3-11/16" x 7/8"	7/16" square	2"	3" x 3"	1/2"
Backing Plate and Trim Ring								
83720	--	--	Plastic	--	--	--	3" x 3"	3/8"
83607	--	--	Gloss black	6" x 6"	7/16"	3" x 3-1/4" (2" center)	--	--
Lashing Rings								
83750	6,100 lbs.	18,000 lbs.	Raw steel	2-1/4" x 1-5/8" x 1-1/4"	--	--	3" x 3"	5/8"
83760	8,833 lbs.	26,500 lbs.	Raw steel	2-1/4" x 1-5/8" x 1-1/4"	--	--	3" x 3"	3/4"
83770	15,587 lbs.	46,760 lbs.	Raw steel	2-1/4" x 2-1/8" x 1-3/4"	--	--	3" x 3"	1"
83780	15,587 lbs.	47,000 lbs.	Raw steel	2-1/4" x 2-1/8" x 1-3/4"	--	--	3" x 4"	1"

* Packaged two-pack

FOLD-AWAY ROPE HOOK

- Fold-away design eliminates obstruction and provides a finished look
- Includes mounting hardware

Folds out as needed and folds away to be unobtrusive

83060 83061

Bulk #	Pkg #	Capacity	Finish
83060	83061	1,200 lbs.	Chrome-plated

WELD-ON STAKE POCKET

- Perfectly sized to accept a 2x4 wood or metal stud
- Raw finish allows for ready welding
- Made in the USA

83072

Part #	Finish	Inside Width	Inside Depth
83072	Raw	3-1/2"	1-5/8"

QUICKLY STOW AWAY AND SAVE INTERIOR SPACE

TRAILER-MOUNTED HD RUBBER WHEEL CHOCKS

- Convenient storage prevents dirt inside your truck or RV and saves space
- Snap-ring clips with wire lanyard store chocks and prevent lost pieces
- Ridged bottom surface prevents chock slippage and movement
- Heavy-duty rubber and steel construction provides long-lasting durability
- Self-tapping screws and trailer frame mounting brackets included

22802

Quickly mount wheel chocks to the trailer frame for easy storage and quick access

Large handles in wheel chocks provide easy carrying and use

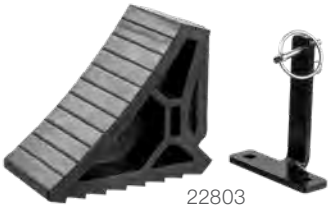

22803

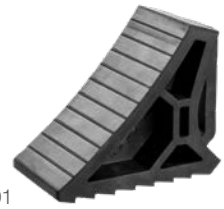

22801

Part #	Includes
22801	One wheel chock
22803	One wheel chock, single-mount bracket and mounting hardware
22802	Two wheel chocks, dual-mount bracket and mounting hardware

WHEEL CHOCK SET

- Raised tread offers a better grip on the wheel
- Saw-tooth edges on the base provide solid traction on the ground
- Always to be used with emergency brake
- Not for commercial use

22800

Adds safety during vehicle maintenance or to parked trailers

Part #	Description
22800	For use with wheels up to 17" wide

WHEEL BEARING KITS

- Automatically maintains the correct internal pressure to avoid seal damage
- Includes two bearing cones, two bearing cups, a grease seal and cotter pin

Part #	Spindle O.D.	Kit Includes
23209	3/4"	(2) LM11910, (2) LM11949, seal, cotter pin
23210	1"	(2) L44643, (2) L44610, seal, cotter pin
23211	1-1/16"	(2) L44649, (2) L44610, seal, cotter pin

23210

23211

BEARING PROTECTORS AND DUST COVERS

- Protects wheel bearings from dirt, water and road grime
- Maintains pressure and keeps bearing greased
- Features a small reservoir to keep bearings well-lubricated
- Covers prevent dust and debris from entering the bearing protector
- Includes two components each

22178

22244

23198

Part #	Dust Cover Two-Pack #	Hub Bore Size
22178	23178	1.78" diameter
22198	23198	1.98" diameter
22232	23232	2.32" diameter
22244	23244	2.44" diameter

New axle components are continually being added. Visit curtmfg.com for the latest offering

AXLE COMPONENTS

ELECTRIC BRAKE ASSEMBLIES

- Replacement standard electric brake assembly with park
- Easy, do-it-yourself installation
- Hardware sold separately
- New electric drum brakes will require a break-in period to achieve full performance

297956

298277

Part #	Brake Size	Vehicle Side	Bolt Pattern	Axle Capacity	Adjustment
297956	10" x 2.25"	Driver / left	Four-bolt	3,500 lbs.	Manual
298274	10" x 2.25"	Passenger / right	Four-bolt	3,500 lbs.	Manual
298275	12" x 2"	Driver / left	Five-bolt	4,000 - 7,000 lbs.	Manual
298276	12" x 2"	Passenger / right	Five-bolt	4,000 - 7,000 lbs.	Manual
298277	12.25" x 3.38"	Driver / left	Four-bolt	8,000 lbs.	Self-adjusting
298279	12.25" x 3.38"	Passenger / right	Four-bolt	8,000 lbs.	Self-adjusting

FORWARD SELF-ADJUSTING BRAKE ASSEMBLIES

- With no actuator or hydraulic lines, installation is easier than hydraulic brakes
- Electric actuator (sold separately)
- Brakes self-adjust during every forward stop, providing up to 50% better braking distance
- Available in left-hand (road side) and right-hand (curb side) and multiple wheel sizes and axle ratings
- Helps prevent premature brake line and magnet wear for safer travels
- Lippert helps you take the guesswork out of getting your RV back on the road with exact-match parts designed for your RV

296649

Go with the name you trust and have peace of mind knowing you're traveling with a genuine Lippert replacement part

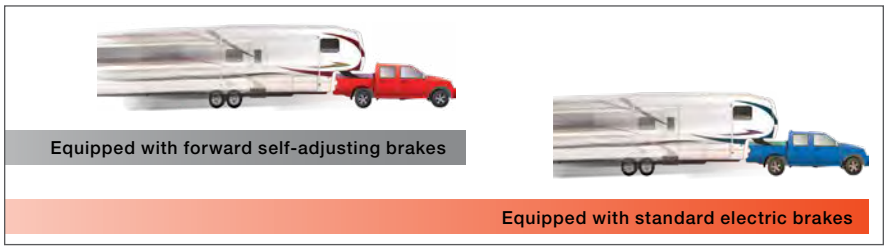

Brakes self-adjust during every forward stop, so you can safely brake during emergency stops. They provide optimal brake performance by correcting clearance during every stop. They also prevent premature brake line and magnet wear, which will save you money over the long haul

Part #	Brake Size	Vehicle Side	Bolt Pattern	Axle Capacity	Adjustment
296649	10" x 2.25"	Driver / left	Four-bolt	3,500 lbs.	Self-adjusting
296650	10" x 2.25"	Passenger / right	Four-bolt	3,500 lbs.	Self-adjusting
296651	12" x 2"	Driver / left	Five-bolt	4,000 - 7,000 lbs.	Self-adjusting
296652	12" x 2"	Passenger / right	Five-bolt	4,000 - 7,000 lbs.	Self-adjusting

BRAKE ASSEMBLY MAGNET KIT

- Compatible with Lippert electric brake assemblies
- Compatible with most RV manufacturers
- Magnet kit comes in oval design

136447

Part #	Description	Kit Includes	Brake Size
136447	Magnet kit	Magnet with black lead wires, retainer clip and spring	12" x 2"

BRAKE HUBS

- Lippert genuine replacement part
- Constructed from solid iron
- Assemblies come with bearing cones, seal and grease installed

353323

814200

814211

Part #	Brake Hub Size	Bolt Pattern	Wheel Size	Stud Size	Bearing Kit #	Axle Capacity	Dust Cap Diameter	Grease Cap #	Oil Cap #
Hub Drum Only									
347627	12"	8 on 6-1/2"	17-1/2"	5/8"	--	8,000 lbs.	--	85373929	85373928
359552	12"	8 on 6-1/2"	17-1/2"	9/16"	--	8,000 lbs.	--	85373929	85373928
2772121	12-1/4"	8 on 6-1/2"	17-1/2"	5/8"	--	8,000 lbs.	--	85373929	85373928
2772101	12-1/4"	8 on 6-1/2"	16" - 17-1/2"	9/16"	--	8,000 lbs.	--	85373929	85373928
297983	12-1/4"	8 on 6-1/2"	16" - 17-1/2"	5/8"	--	12,000 lbs.	--	85373829	85373828
353323	12-1/4"	8 on 275mm	17-1/2"	M22	--	16,000 lbs.	--	85373829	85373828
Hub Drum Assemblies (Bearing Kit Pre-Installed & Greased)									
814200	10"	5 on 4-1/2"	12" - 15"	1/2"	333948	3,500 lbs.	1.99"	--	--
814202	12"	6 on 5-1/2"	15" - 16"	1/2"	333950	6,000 lbs.	2.45"	--	--
814203	12"	8 on 6-1/2"	16"	1/2"	333951	7,000 lbs.	2.72"	--	--
814204	12"	8 on 6-1/2"	16" - 17-1/2"	9/16"	333951	7,000 lbs.	2.72"	--	--
Hub Drum (Bearing Kit Included)									
814210	10"	5 on 4-1/2"	12" - 15"	1/2"	333948	3,500 lbs.	1.99"	--	--
814211	12"	6 on 5-1/2"	15" - 16"	1/2"	333950	6,000 lbs.	2.45"	--	--
814212	12"	8 on 6-1/2"	16"	1/2"	333951	7,000 lbs.	2.72"	--	--
814213	12"	8 on 6-1/2"	16" - 17-1/2"	9/16"	333951	7,000 lbs.	2.72"	--	--

IDLER HUBS

- Lippert genuine replacement part
- Constructed from solid iron

Part #	Bolt Pattern	Wheel Size	Stud Size	Axle Capacity
134574	4 on 4"	8" - 12"	1/2"	2,200 lbs.
122098	5 on 4-1/2"	13" - 15"	1/2"	3,500 lbs.

134574

122098

AXLE HUB DUST CAPS

- Shields bearings, grease and other inner hub components from dust and contaminants
- Identified by axle weight capacity, making it easy to find the right fit
- Available in single or 10-pack
- Made for up to 8,000 lb. capacity axles
- Rubber insert not included

127206

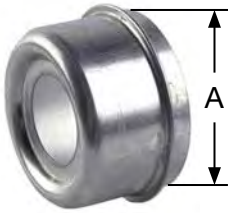

122064

Part #	10-Pack #	Cap Diameter (A)	Lube	Axle Capacity
122099	693794	1.99"	Non-lubed	2,000 - 3,500 lbs.
122067	693824	1.99"	Super lube	2,000 - 3,500 lbs.
122071L	693795	2.45"	Non-lubed	5,200 - 6,000 lbs.
122064	693749	2.45"	Super lube	5,200 - 6,000 lbs.
127206	--	2.72"	Non-lubed	7,000 - 8,000 lbs.
127300	693748	2.72"	Super lube	7,000 - 8,000 lbs.

Shields bearings, grease and other inner hub components from dust and contaminants

UNIVERSAL RUBBER INSERT FOR DUST CAPS

- For use with axle hub dust caps
- Dust cap not included

Part #	10-Pack #	For Use With
122065	693722	Lubed dust caps

122065

For use with lubed axle hub dust caps

BEARING KITS

- Fits 3,500 to 7,000 lb. capacity trailer axles
- Includes all components needed to repack one axle hub: outer bearing with cotter pin, outer race, inner race, inner bearing and grease seal
- Compatible with Lippert, Dexter or Al-Ko trailer axle hubs

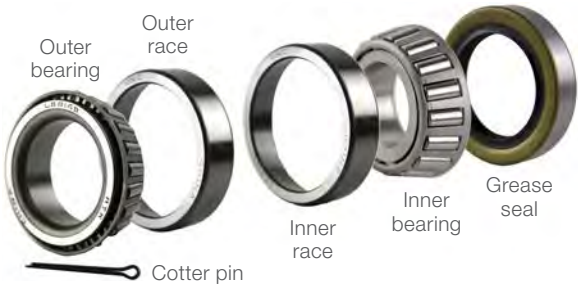

Kit #	Axle Capacity	Includes	Outer Bearing*	Outer Race*	Inner Race*	Inner Bearing*
333948	3,500 lbs.	Grease seal and cotter pin	L44649*	L44610*	L68111*	L68149*
333949	5,200 lbs.	Grease seal and cotter pin	LM67048*	LM67010*	25520*	25580*
333950	6,000 lbs.	Grease seal and cotter pin	15123*	15245*	25520*	25580*
333951	7,000 lbs.	Grease seal and cotter pin	14125A*	14276*	25520*	25580*

* Components not sold separately

OIL AND GREASE CAPS

- Designed for axle hubs
- Easy, screw-in installation
- O-ring and plug included for a complete seal
- Clear cap allows for better retention and visual inspection of oil levels
- For use with oil bath lubrication

695814

85373929

Part #	Includes	Axle Capacity
Clear Plastic Oil Caps		
695814	Rubber plug and O-ring	8,000 lbs.
693935	Rubber plug and O-ring	10,000 - 16,000 lbs.
Aluminum Grease Caps		
85373929	Rubber plug and O-ring	8,000 lbs.
85373829	Rubber plug and O-ring	10,000 - 16,000 lbs.
Aluminum Oil Caps		
85373928	Rubber plug, O-ring, fill plug	8,000 lbs.
85373828	Rubber plug, O-ring, fill plug	10,000 - 16,000 lbs.

GREASE SEALS

- Provides protective barrier between the axle hub grease and the outside elements
- Compatible with: Lippert, Dexter or Al-Ko trailer axle hubs with corresponding grease seal measurements

333962

Two-Pack #	10-Pack #	Inside Diameter	Outside Diameter	Axle Capacity
333960	333961	1.719" ID	2.565" OD	3,500 lbs.
333962	333963	2.25" ID	3.376" OD	5,200 - 8,000 lbs.

UNITIZED OIL SEALS

- Provides protective barrier between the axle hub grease and the outside elements

Part #	Inside Diameter	Outside Diameter	Shaft Size	Axle Capacity
276712	2.226" ID	3.391" OD	2-1/4"	5,200 - 8,000 lbs.
176692	2.875" ID	3.875" OD	2-7/8"	10,000 lbs.
295924	3.125" ID	4.500" OD	3-1/16"	12,000 - 16,000 lbs.

276712

295924

AXLE AP KITS AND COMPONENTS

- Helps bolt axle leaf springs to axle hangers

Part #	Description	Dimensions
121097L	Tandem AP kit	33" axle spacing (EQ-104)
121098L	Tandem AP kit	33" axle spacing (EQ-310)
2020219547	Universal Tandem Axle Repair Kit	--

121097L

121098L

AXLE MOUNTING KITS

- Includes four U-bolts, two tie-plates and eight nuts

Part #	Thread End	Length	Axle Tube	Axle Capacity
297427	1/2"-20	5.1"	2.38"	3,500 lbs.
297429	1/2"-20	6.5"	3"	4,400 lbs.

297427

297429

BRONZE LEAF SPRING BUSHING

- Standard for most Lippert axle hanger attaching part kits
- Compatible with most leaf spring eyes

Part #	Length	Inside Diameter	Outside Diameter
126171	1.74"	0.58"	0.70"

126171

AXLE HANGERS

- Axle hangers are welded to the chassis to allow mounting of axles and axle components

Part #	To Hole (A)	Length (B)	Width (C)	Hole Size (D)
106185L	4.25"	4.948"	2"	9/16"

106185L

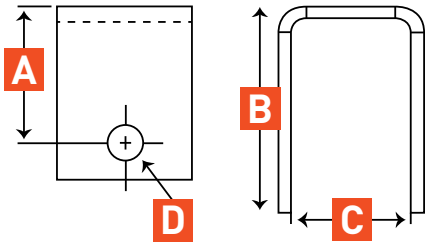

AXLE BOLTS AND NUTS

121803L

132624

126238

126197

176321

352303

122076

134581

Part #	Description	Diameter	Shoulder Length	Thread End
121803L	Wheel lug stud	0.617" knurl	2"	1/2"-20
132624	Wheel lug stud	0.617" knurl	2.31"	9/16"-18
126238	Wet bolt	9/16"	2.32"	7/16"-20
126197	Wet bolt	9/16"	2.82"	7/16"-20
176321	Flange wheel nut	--	--	5/8"-18
352303	Wheel nut	--	--	M22-1.5
122076	60° cone wheel nut	--	--	1/2"-20
134581	60° cone lug nut	--	--	9/16"-18

SHOCK ASSEMBLIES

- Bolt-on shock kit absorbs road shock to provide a more comfortable towing experience
- Kit comes with everything needed to attach gas shocks to existing RV or trailer suspension

281255 & 281281

283280

283271

Part #	Includes	Fits	Compressed Length	Extended Length
281255	Two shock assemblies, four U-bolts, two shock mount assemblies, two tie plates, eight washers, hex nuts and hex bolts	2-3/8" axles tubes	8-5/8"	13-1/2"
281281	Two shock assemblies, four U-bolts, two shock mount assemblies, two tie plates, eight washers, hex nuts and hex bolts	3" axles tubes	8-5/8"	13-1/2"
283280	One heavy-duty yellow shock, four top plates, four rubber bushings, two nuts	All axle tube sizes	8-5/8"	13-1/2"
283271	One standard black shock, four top plates, four rubber bushings, two nuts	All axle tube sizes	7-1/2	12"

SLIPPER SPRINGS

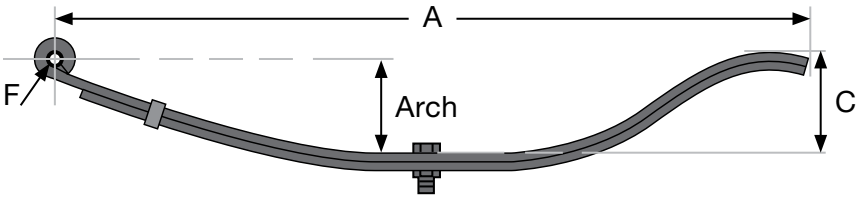

Part #	# of Leaves	Capacity	Industry	Spring Width	Eye-to-End Length (A)	Arch Height Unloaded (C)	Eye Diam. (F)	Loaded Arch Length
710494	7	4000 lbs.	72-33	2"	26.88"	3"	9/16"	27.88"
176326	5	5,000 lbs.	72-80	2.5"	30.50"	4"	3/4"	31.50"

DOUBLE-EYE SPRINGS

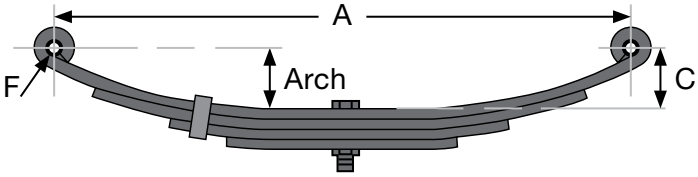

Part #	# of Leaves	Capacity	Industry	Spring Width	Unloaded Eye-to-Eye Length (A)	Loaded Length	Arch Height Unloaded (C)	Eye Diam. (F)	Loaded Arch Length
125269	4	1,400 lbs.	72-13	1.75"	20.50"	21"	3.50"	9/16"	2.38"
124903L	4	1,750 lbs.	72-42	1.75"	25.50"	26"	3"	9/16"	1.50"
702096	4	3,000 lbs.	72-26	1.75"	25.25"	26"	3.13"	9/16"	1.75"
129745	4	2,200 lbs.	72-78	1.75"	25.25"	26"	3.13"	9/16"	2"
702095	4	2,600 lbs.	72-97	1.75"	25.25"	26"	3.13"	9/16"	1.75"
679372	6	3,500 lbs.	72-98	1.75"	24.875"	26"	3.25"	9/16"	1.75"
2021095282	7	4,000 lbs.	72-100	1.75"	24.875"	26"	3.25"	9/16"	1.75"

EQUA-FLEX®
RUBBERIZED EQUALIZER

- Dramatically reduces fore to aft trailer movement, otherwise known as chucking
- Helps eliminate trailer and cargo damage caused by road shock and vibration
- Delivers a ride as smooth as torsion axles at a fraction of the cost
- Includes pre-installed bronze bushings
- Center hanger and other mounting hardware sold separately

279687

281314

314336

279688

279689

Standard

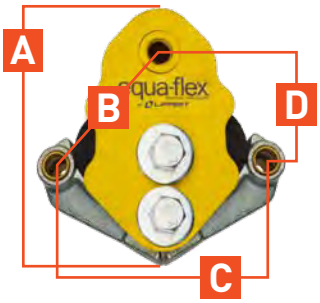

Wide stance

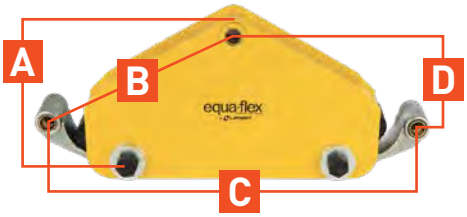

Heavy-duty

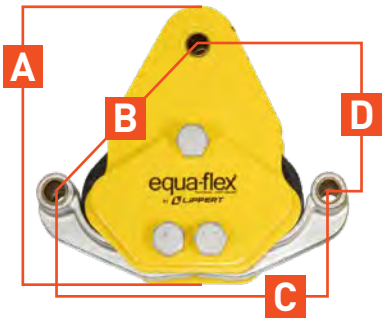

Helps eliminate trailer and cargo damage caused by road shock and vibration

Part #	Axle Configuration	A	B	C	D	E	Axle Capacity
279687	Tandem	6"	4-1/8"	5-1/2"	2-7/8"	--	4,000 lbs. - 6,000 lbs.
279688	Tandem, heavy-duty	7-1/4"	5-1/2"	7-1/4"	3-5/8"	--	6,000 lbs. - 8,000 lbs.
314336	Tandem, wide stance	6-1/2"	8-1/4"	14-5/8"	1-7/8"	--	3,500 lbs. - 5,200 lbs.
281314	Triple	6"	4-1/8"	5-1/2"	2-7/8"	6-3/4"	3,000 lbs. - 6,000 lbs.
279689	Triple, heavy-duty	7-1/4"	5-1/2"	7-1/4"	3-5/8"	8-3/8"	5,000 lbs. - 8,000 lbs.

ROAD ARMOR™ SHOCK-ABSORBING TRAILER EQUALIZER KIT

- Using anti-shock technology, road shock and vibrations are dampened, resulting in less chucking and less strain on the trailer
- Offers RVers and trailer owners a superior suspension enhancement
- Exceptional substitution for torsion axles
- Single pivoting arm allows constant absorption and dampened road shock from the leading or trailing spring, utilizing the trailer's natural motion
- Upgraded spray-coating on all fasteners to match automotive specifications
- Mounting hardware sold separately
- Patent pending

2021015191

Engineered to obtain maximum absorption with its anti-shock technology

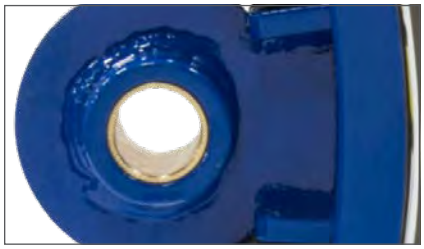

Greaseable bronze bushings improve wear and tear

Part #	Axle Configuration	Axle Capacity	Includes
2021015191	Tandem	3,500 lbs. - 8,000 lbs.	Two tandem equalizers, greaseable bronze bushings and fasteners

CENTER POINT® AIR RIDE RV SUSPENSION SYSTEMS

- Dampens road shock and trailer sway for a smoother, more comfortable ride
- Helps eliminate trailer and cargo damage caused by road shock and vibration
- Dampens road shock more effectively than torsion axles
- Dramatically improves braking distance in panic stops
- Includes all necessary mounting hardware for easy installation

1565391

1565401

Part #	Description	Axle Configuration
1565391	Suspension upgrade kit	Tandem
1565401	Suspension upgrade kit	Triple
293054	Air unit only	--

293054

REPLACEMENT PARTS

CLEVIS HOOK LATCH

Part #	Description	Fits
81999	Clevis hook latch	81950

81999

CHANNELS & LUNETTE RINGS

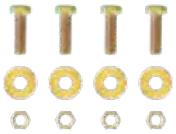
48553

48332

48620

48552

Bulk #	Pkg #	Description	Fits
Lunette Rings			
48553	--	Hardware kit includes: - 3/4" hex bolts, qty 4 - 3/4" nylock nuts, qty 4 - 3/4" flat washers, qty 4	48560 48661
48332	--	Hardware kit includes: - 5/8" socket head cap screw, qty 4 - 5/8" hex nuts, qty 4 - 5/8" lock washers, qty 4	48550

Bulk #	Pkg #	Description	Fits
Channels			
48620	48621	Hardware kit includes: - 5/8" x 5-1/2" hex bolts, qty 2 - 5/8" nylock nuts, qty 2 - 5/8" flat washers, qty 4 - 1/2" x 1-1/2" hex bolts, qty 2 - 1/2" flat washers, qty 2	48630 48631 48610 48650 48640
48552	--	Hardware kit includes: - 5/8" hex bolts, qty 3 - 5/8" nylock nuts, qty 3 - 5/8" flat washers, qty 6	48641 48651 48610 48650

COUPLERS

19272

25094

25194

25294

25388

Bulk #	Pkg #	Description	Fits
QuickPin Couplers			
19272	--	1/2" pin, clip and lanyard	25470 25471 25472
Straight-Tongue Couplers			
--	25094	Posi-lock latch for 1-7/8" couplers	25105 25128 25131
--	25194	Posi-lock latch for 2" couplers	25153 25135 25138 25100

Bulk #	Pkg #	Description	Fits
A-Frame Couplers			
--	25294	Posi-lock latch for 2" couplers	25101 25210
Channel-Mount Couplers			
25388	25398	Hardware kit includes: - 5/8" x 4-3/4" hex bolts, qty 2 - 5/8" nylock nuts, qty 2 - 5/8" flat washers, qty 4	25319 25329 25330 25328

JACK REPLACEMENT PARTS

Marine Jacks

Bulk #	Pkg #	Description	Fits
28910	--	Bolt-through mounting bracket	All
28911	--	Bolt-through mounting bars (two) and bolts (four)	All
28912	--	Caster wheel with bolt and bushing	All
28913	--	Handle	All
28914	--	Gear kit with shear pins	All
28926	--	Handle grip with cap nut	All
28939	28941	Snap ring, 2"	28100, 28101
28940	--	Mounting bracket pull-pin, 1/2"	All

A-Frame Jacks

Bulk #	Pkg #	Description	Fits
28921	--	Handle	28200, 28202, 28203, 28250
28925	--	Plastic top cap	28204
28926	--	Handle grip with cap nut	28200, 28202, 28203, 28204, 28250
28927	--	Top-wind handle knob with cap nut	28255
28937	28944	Top-wind handle with hardware	28255

Swivel Jacks

Bulk #	Pkg #	Description	Fits
28922	--	Bearing for top-wind jacks	28320, 28350, 28351, 28356, 28322, 28323, 28300, 28301, 28304
28923	--	Side-wind handle	28321, 28354, 28358, 28324, 28302, 28306
28924	--	Gear kit with shear pins for side-wind jacks	28321, 28354, 28358, 28324, 28302, 28306
28930	--	Female pipe weld-on, 9/16" pin hole	28320, 28350, 28351, 28322, 28323, 28321, 28324
28931	28942	Male pipe weld-on, 9/16" pin hole	28320, 28350, 28351, 28322, 28323, 28321, 28324
28932	28943	Male pipe weld-on, 5/8" pin hole	28356, 28354, 28358
28934	--	9/16" pin with 3-1/2" long chain	28320, 28350, 28351, 28322, 28323, 28321, 28324
28935	--	5/8" pin with 3-1/2" long chain	28356, 28354, 28358
28938	--	Mounting bracket	28300, 28301, 28302, 28304, 28306
28926	--	Handle grip with cap nut	28321, 28354, 28358, 28324, 28302, 28306
28927	--	Top-wind handle knob with cap nut	28320, 28350, 28351, 28356, 28322, 28323, 28300, 28301, 28304
28937	28944	Top-wind handle (hardware incl.)	28320, 28350, 28351, 28356, 28322, 28323, 28300, 28301, 28304
28939	28941	Snap ring, 2"	28300, 28301, 28302, 28304
28940	--	Mounting bracket pull-pin, 1/2"	28300, 28302, 28304, 28306

Direct-Weld Square Jacks

Bulk #	Pkg #	Description	Fits
28950	--	Gear kit with shear pins	28512
28951	--	Handle	28512
28952	--	Cap	28512
28953	--	Handle clip	28512
28954	--	Bearing	28512
28955	--	Pull-pin assembly (3/4" pull-pin, spring, washer and cotter pin)	28512
19284	--	Threaded ACME rod and nut	28512
28957	--	Inner pipes with drop leg, foot and pull-pin	28512
28958	--	Gear kit with shear pins	28575
28959	--	Side-wind handle w/ pins / bushings	28575

Bulk #	Pkg #	Description	Fits
28960	--	Side-wind handle with pins, bushings and gears	28575
28961	--	Cap and screws	28575
28926	--	Handle grip with cap nut	28575, 28359
28962	--	Drop leg with foot	28575, 28570
28963	--	Drop leg foot pin	28575, 28570
28964	--	Handle kit	28570
28965	--	Bearing	28570
28927	--	Top-wind handle knob with cap nut	28570
28937	28944	Top-wind handle (hardware incl.)	28570

CARGO MANAGEMENT

FEATURED PRODUCTS

ActiveLink™ ball mount

Made exclusively for ActiveLink™, easily swap your cargo carrier or bike rack out for a 2" ball and tow up to 3,500 lbs. GTW in a snap!

Aluminum tray-style rack

Give your customers a dependable but easy-to-handle option for transporting their bikes. This 2-bike rack weighs only 45 lbs.

Garage storage bracket

This simple, multi-function bracket stores hitch accessories and keeps garages organized by keeping accessories off the floor.

PRODUCT INDEX

302 Tray-Style Bike Racks

304 ActiveLink™ System

308 Hitch-Mounted Bike Racks

309 Bike Rack Accessories

311 Seat Defender™ Seat Covers

312 Hitch-Mounted Cargo Carriers

316 Roof Rack Accessories

320 Cargo Bags & Nets

321 Cargo Straps

322 Extenders & Adapters

323 Specialty Mounts

324 Rings & Tie-Down Anchors

FITS A WIDE VARIETY OF BIKE FRAMES AND TIRE SIZES

2 INCH ALUMINUM TRAY-STYLE HITCH-MOUNTED BIKE RACK

E-bike compatible

- Padded arms and tray-style cradles keep bikes fully secure with 3 contact points
- Zero frame contact to avoid nicks and scratches
- Highly adjustable to fit various bike sizes and styles, including e-bikes
- Fits 20-29" diameter wheels, including road tires and fat tires up to 4" wide
- Shank with integrated anti-rattle and lock provides a secure, quiet ride
- Safety trigger latch in handle eliminates unintended release
- Keyed-alike arm safety cable and shank locks for convenient access
- Aluminum-steel construction only weighs only 45 lbs.
- Quick, easy 10-bolt assembly
- Tilts away for rear vehicle access and folds up for compact storage
- Durable carbide black powder coat finish

18088

Ratcheting arms nest below tray for more compact storage and easy handling

Integrated safety cable to secure bikes – keyed alike with anti-rattle

Molded cradles designed to accommodate different bike tire diameters

Part #	Number of Bikes	Max Load	Shank Size	Fits Wheel Diameter	Fits Tire Width
18088	Up to 2	130 lbs.	2"	20" to 29"	Up to 4" wide

1¼ INCH & 2 INCH STEEL TRAY-STYLE HITCH-MOUNTED BIKE RACKS

- Tray-style cradles provide three points of contact to keep bikes fully secure
- Key-operated ratchets also deter theft while the vehicle is left unattended
- Tray-style design allows for easy loading and unloading of bikes
- Threaded anti-wobble shank helps prevent bikes from swaying
- Padded arms protect the bike frames from nicks and scratches
- Adapter sleeve allows mounting on 1-1/4" or 2" receiver tubes (18085 only)
- Removable extension allows for two- or four-bike capacity (18087 only)
- 4-7/8" (inside width) fat-tire cradles available (#18091)
- Protected by a durable black powder coat finish

Ratcheting arms lock down onto the frames and will not loosen

Tilts away for convenient rear vehicle access

Folds up when not in use for compact storage

18091 fat tire cradles replace existing cradles on CURT racks

18085

18087

Part #	Number of Bikes	Max Load	Shank Size	Extendable
Tray-Style Bike Racks				
18085	Up to 2	90 lbs.	1-1/4" x 1-1/4" 2" x 2"	No
18087	Up to 4	180 lbs.	2" x 2"	Yes
Cradles for Fat Tire Bikes				
18091	Includes two cradles	90 lbs.	4-7/8" inside width	

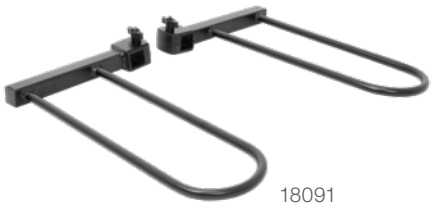

18091

ACTIVELINK™ SERIES
CLICK, LOAD AND GO!

Enjoy your active, outdoor lifestyle with less stress with the CURT ActiveLink™ system. This revolutionary towing technology allows you to swap out any accessory faster and easier than a traditional hitch setup.

Scan to learn more

How the ActiveLink™ System Works

1. Install the shank just once

Shank provides integrated resting point for struggle-free installation

2. Click in your accessory

Unique connection allows you to easily swap out accessories as needed

3. Insert pin & clip and go!

Patent-pending ActiveLink design for fast, secure attachment with pin and clip

ACTIVELINK™ BIKE RACKS

- Tilt-away feature for easier access to vehicle cargo area
- Anti-rattle hitch pin and anti-rattle hand wheel for reduced noise
- Arms fold down when not in use for compact storage
- Adjustable cradles to accept various frame tube sizes
- Plastic lining on shank helps suppress vibration
- Integrated handle for easy removal and carrying
- Steel construction with dual E-coat and carbide black powder coat finish
- Built-in reflectors on the ends of the arms for increased visibility (#18410, #18411)
- Tiered ascending configuration improves clearance for outer bikes (#18412)

18410

18411

18412

SE & Ultra series

Rubber bumper pad on vertical support tube to protect from scuffs and scratches

Ultra series only

Flip-back arm allows for better accessibility when loading inner bikes

Ultra series only

Bikes can easily be lifted onto cradles from underneath – no threading needed

Part #	Series Name	Number of Bikes	Capacity	Shank Size
Bike Racks				
18410	SE	Up to 2	90 lbs.	2" included (1-1/4" sold separately, #18401)
18411	SE	Up to 4	180 lbs.	2" included (1-1/4" sold separately, #18401)
18412	Ultra	Up to 4	180 lbs.	2" included (1-1/4" sold separately, #18401)
Shanks				
18401	--	--	3,500 / 350 lbs.	1-1/4"
18402	--	--	5,000 / 500 lbs.	2"

PACK WHAT YOU WANT FOR YOUR NEXT ADVENTURE

ACTIVELINK™ ALUMINUM CARGO CARRIER

- Patent-pending ActiveLink™ design for fast, secure attachment with a pin and clip
- Integrated hook and shank provide for struggle-free installation
- One-piece welded aluminum basket with durable carbide black powder coat finish
- Weighs only 25 lbs. for easy moving and handling
- Rated to carry loads up to 500 lbs.
- 6-bolt assembly for fast, easy installation
- Spacious design provides ample room for cargo
- Mounts onto any 2" x 2" receiver tube opening

18415

Integrated eye bolts for secure attachment of straps or other tiedowns

Carrier can be flipped in the shank when not carrying a load for compact transport

Built-in reflectors add visibility for increased safety

Part #	Capacity	Inside Dimensions	Shank Size	Shank	Finish	Material
18415	500 lbs.	49" (L) x 22-1/2" (W) x 4" (H)	2"	Fixed	Carbide black	Steel and aluminum

ACTIVELINK™ ACCESSORY SHANKS

- Independent shanks for easy swapping on multiple vehicles
- Unique connection allows you to easily swap out accessories as needed
- Patent-pending design for fast, secure accessory attachment with a pin and clip
- Tilt-away feature for easier access to the vehicle cargo area (bike racks only)
- Strong steel construction with dual E-coat and carbide black powder coat for lasting weather resistance

18401

18402

Bottom bolt provides integrated resting point for struggle-free installation

Anti-rattle hitch pin and anti-rattle hand wheel for reduced noise

Plastic interior lining protects against scratches and helps suppress vibration

Part #	GTW / TW	Shank Size	Compatibility
18401	3,500 / 350 lbs.	1-1/4"	ActiveLink series accessories
18402	5,000 / 500 lbs.	2"	ActiveLink series accessories

ACTIVELINK™ BALL MOUNT

- Rated for 3,500 lbs. GTW and 350 lbs. TW
- Quickly and easily mount a 2" tow ball for towing
- Constructed from durable, strong steel
- Includes factory-torqued trailer ball
- Protected with a rust resistant, liquid A-coat
- Finished with a carbide black powder coat

18416

Unique connection allows you to easily swap out accessories as needed

Part #	GTW / TW	Fits
18416 N	3,500 / 350 lbs.	18401 and 18402 ActiveLink shanks

1¼ INCH & 2 INCH HITCH-MOUNTED BIKE RACKS

All bike racks

- Arms fold down when not in use for compact storage
- Threaded anti-wobble shank prevents bikes from swaying during travel
- Protected by a durable black powder coat finish

Premium

- Available in 2" shank only
- Built-in reflectors for added safety
- Tapered arms accommodate multiple bike sizes

Standard

- Bolt-together post can be taken apart for compact storage
- Compact package makes part numbers retail-friendly
- Adapter sleeve allows mounting on 1-1/4" or 2" receiver tubes
- Support strap included

Adjustable rubber cradles will not scratch bike frames

Tilts away for convenient rear vehicle access

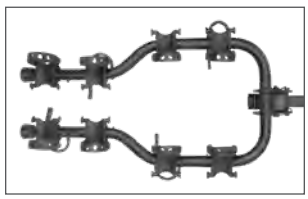

Tapered arms accommodate multiple bike sizes (premium only)

Bolt-on extension arms allow for two- or four-bike capacity

18064

18065

18030

18021

Part #	# of Bikes	Max Bike Capacity	Shank Size	Extensions
Premium Hitch-Mounted Bike Racks				
18064	Up to 4	180 lbs.	2"	Not extendable
18065	Up to 5	225 lbs.	2"	Not extendable
Standard Hitch-Mounted Bike Racks				
18030	Up to 4	90 lbs. without extensions 180 lbs. with extensions	1-1/4" 2"	Included
18021	Up to 2	90 lbs.	1-1/4" 2"	Not included (use #18020)
Extension Arms for #18021 Only				
18020	Adds 2	Adds 90 lbs.	--	--

18020

2 INCH

CLAMP-ON BIKE RACK

- Clamps onto any 2" x 2" ball mount shank (ball mount not included)
- Adjustable rubber cradles will not scratch bike frames
- Easily accessible release handle allows for fast installation and removal
- Folding arms for compact storage
- Safety latch helps prevents pinching and collapse when removing from shank
- Protected by a durable black powder coat finish
- Includes support straps

18013

Clamps onto any 2" accessory shank (not included)

Adjustable rubber cradles will not scratch bike frames

Easily accessible release handle allows for fast install and removal

Built-in reflectors provide added visibility for safety

Part #	Clamp Size	Number of Bikes	Max Load
18013	2" x 2"	Up to 3	135 lbs.

BIKE BEAM

- Allows bike with angled frame to be used on non-tray-style bike racks
- Extends from 22-1/2" to 31" to accommodate multiple bike sizes
- Made with high-strength steel construction

Part #	Length	Finish
18016	Extends from 22-1/2" to 31"	Black

Allows bike with angled frame to be used on bike rack

18016

BIKE RACK SUPPORT STRAP

- Vinyl-coated hook prevents scratches to paint
- Required for all 1-1/4" hitch-mounted bike racks and cargo carriers (Recommended for all hitch-mounted bike racks)
- Failure to use a support strap with a 1-1/4" bike rack may void the warranty of the trailer hitch and bike rack

Part #	Dimensions
18050	1" wide by 61" long

Adds stability and support for a hitch-mounted bike rack

18050

MULTI-USE CABLE LOCK

- Features versatile locking and cinching capabilities
- 6' length allows for great use as a bike lock
- Includes two keys for added convenience

Part #	Length	Cable	Finish
23666	6'	3/8" diameter	Vinyl-coated, braided steel

Secures bike racks and cargo to deter theft

23666

ANTI-RATTLE HITCH CLAMPS & PINS

Clamp-style

- Stops rattling and prevents shank movement
- Compatible with hollow and solid shank accessories
- No-tool installation and easy-to-adjust clamp lever
- Lightweight aluminum and high-strength steel
- Durable, clear finish for corrosion resistance

Pin-style

- Stops rattling and prevents shank movement
- Compatible with hollow shank accessories
- Protected by a durable yellow zinc-plated finish

22325

22320

22315

22323

Stops rattling and prevents shank movement for hollow and solid shanks (clamp-style)

No-tool installation and easy-to-adjust clamp lever (clamp-style)

Insert into hollow-shanks to prevent sway and stop rattling (pin-style)

Part #	Fits Shank Type	Fits Tube Size	Pin Diameter	Clip Attachment	Finish
Clamps					
22325	Hollow or solid	2" x 2"	--	--	Clear
22320	Hollow or solid	2-1/2" x 2-1/2"	--	--	Clear
Pins					
22315	Hollow only	1-1/4" x 1-1/4"	1/2"	Hole	Yellow zinc-plated
22323	Hollow only	2" x 2"	5/8"	Groove	Yellow zinc-plated

HITCH ACCESSORY WALL MOUNT

- Simple, multi-function bracket to store cargo carriers, bike racks, ball mounts, and more
- Compatible with virtually any 2" shank hitch accessory
- Also compatible with 1-1/4" accessories in the vertically mounted position

45069

Improves garage organization by keeping accessories off the floor

Horizontal and vertical openings to mount accessories in either orientation

Narrow faceplate allows installation on a 2x4 stud or similar

Part #	Capacity	Includes	Finish
45069	350 lbs.	Bracket and two lag bolts	Gloss black

SEAT DEFENDER™ REMOVABLE SEAT COVERS

- Use-as-needed, universal design, is fast and easy to install, remove, clean and store
- 100% waterproof and machine washable (air-dry only)
- Allows for side airbag deployment
- Maintains seat belt access (bench seat units may interfere with center shoulder strap)
- XL bench seat model is designed to fit larger bench seats in full-size trucks and SUVs
- Cargo area blanket for picnics, sporting events, work under the car and more

18501 18500 18502

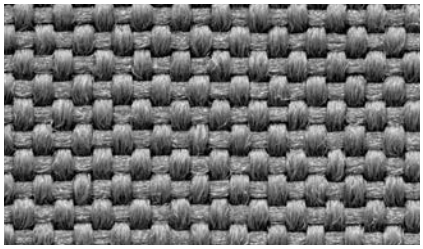
Top is made of durable, woven 600-denier terylene fabric to keep spills and dirt out

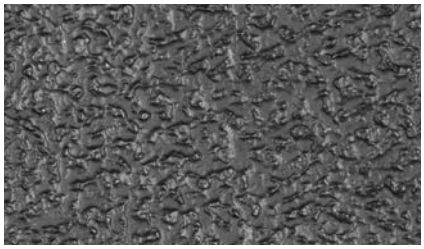
Underside is waterproof rubber to protect against spills and grip the seat for safety

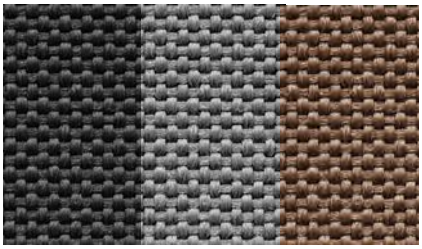
Available in three color options: black, grey and brown

Location	Width	Height	Black #	Grey #	Brown #
Bucket	23"	58"	18501	18500	18502
Bench	55"	58"	18511	18510	18512
XL bench	63"	58"	18521	18520	18522
Cargo area	60"	60"	18530	--	--

COMPACT, DOUBLE-FOLDING RAMP

ALUMINUM CARGO CARRIER WITH RAMP

- Three-position ramp can be extended, folded vertically or stowed in the carrier
- Double-folding ramp for ergonomic operation and less wind resistance
- Ramp folds flat into the carrier for compact storage and rear vehicle access
- Threaded anti-rattle shank to resist sway and suppress noise
- Non-skid ridges provide enhanced traction when moving up or down the ramp
- Built-in reflectors add visibility for increased safety
- 8-bolt assembly for fast, easy installation
- Fully welded aluminum construction with durable carbide black powder coat finish

18112

Built-in ramp for easy loading of scooters, push mowers, snow blowers and more

When not in use, carrier folds up for convenient parking and storage

Six integrated eye bolts for secure attachment of straps or other tiedowns

Part #	Capacity	Inside Dimensions	Shank Size	Shank	Finish	Material
18112	500 lbs.	50" (L) x 30-1/2" (W) x 4" (H)	2" x 2"	Folding	Carbide black	Aluminum

ALUMINUM BASKET-STYLE CARGO CARRIER

- One-piece welded aluminum basket with durable carbide black powder coat finish
- Weighs only 25 lbs. for easy moving and handling
- Rated to carry loads up to 500 lbs.
- 4-bolt assembly for fast, easy installation
- Spacious design provides ample room for cargo
- Six integrated eye bolts for secure attachment of straps or other tiedowns
- Built-in reflectors add visibility for increased safety

18113

4" tall sides help keep cargo more secure

Rated for 500 lbs. but only weighs 25 lbs.

Built-in reflectors for added safety

Part #	Capacity	Inside Dimensions	Shank Size	Shank	Finish	Material
18113	500 lbs.	49" (L) x 22-1/2" (W) x 4" (H)	2" x 2"	Fixed	Carbide black	Steel and Aluminum

UNIVERSAL ATV CARGO CARRIER

- Universal design fits most ATV cargo racks
- 6" tall sides keep items more secure during travel
- Lightweight for easy installation and use
- Mesh base for easy cleanup
- Heavy-duty, tubular steel with a highly durable E-coat and carbide black powder coat finish
- Includes universal mounting hardware

18101

Quickly and easily installs onto ATV racks

Adds extra space for securing cargo

6" tall sides keep items more secure

Part #	Capacity	Finish	Material	Inside Dimensions
18101	Limited to ATV	Carbide black	Steel	41" (L) x 26" (W) x 6-1/4" (H)

1¼ INCH & 2 INCH TRAY-STYLE CARGO CARRIERS

- Easily bolts together for quick assembly
- Mesh base for easy cleanup
- Features mounting holes for a cargo net or bungees
- #18100 is constructed from lightweight aluminum (shank made from powder-coated steel)
- Protected by a highly durable E-coat and carbide black powder coat finish

Folding design allows carrier to be tilted up when not in use (18100 and 18109 only)

Frees up space inside the vehicle for passengers and cargo

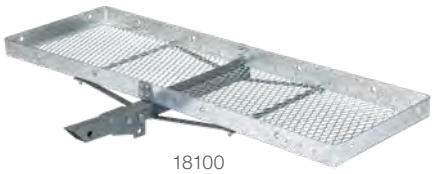

18100

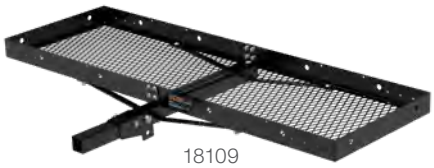

18109

18110

Part #	Capacity	Inside Dimensions	Shank	Shank	Finish and Material
18110	300 lbs.	47-3/4" (L) x 19-1/2" (W) x 2-1/2" (H)	1-1/4" x 1-1/4" 2" x 2" adapter	Fixed	Carbide black powder coat over steel
18100*	500 lbs.	60" (L) x 19" (W) x 2-3/4" (H)	2" x 2"	Folding	Raw aluminum basket with a powder-coated steel shank
18109*	500 lbs.	60" (L) x 19-1/4" (W) x 2-1/2" (H)	2" x 2"	Folding	Carbide black powder coat over steel

* Rear-mounted spare tire may interfere with the folding feature

AUXILIARY LED INDICATOR LIGHTS

- Auxiliary indicator lights for increased safety on cargo carriers or bike racks
- Double row of LEDs in each strip correspond with brake, turn and running lights
- Industry-standard 4-way flat connector for quick installation
- 3M adhesive backing for secure, convenient mounting
- Durable, waterproof construction for lasting weather resistance

53201

Increases safety on cargo carriers

Versatile, stick-on adhesive backing

Part #	Includes
53201	Two LED light strips, adhesive backing and wiring harnesses

1¼ INCH & 2 INCH BASKET-STYLE CARGO CARRIERS

- Constructed from heavy-duty, tubular steel
- Angled shank elevates carrier for more ground clearance (select models)
- Mesh base for easy cleanup (excl #18145)
- Built-in reflectors add visibility for increased safety
- Easily accepts a cargo bag, cargo net or bungees
- Protected by a highly durable E-coat and carbide black powder coat finish

6" tall sides keep items more secure during travel

Frees up space inside the vehicle for passengers and cargo

Folding design allows carrier to be tilted up when not in use (select models)

18150

18151

18145

18152

18153

Part #	Capacity	Inside Dimensions	Shank Size	Shank	Finish	Material
18150	500 lbs.	59-1/2" (L) x 20-1/4" (W) x 5-12" (H)	2" x 2"	Fixed	Carbide black	Steel
18151*	500 lbs.	58" (L) x 20" (W) x 5-1/2" (H)	2" x 2"	Folding	Carbide black	Steel
18152	500 lbs.	60" (L) x 24" (W) x 6" (H)	2" x 2"	Fixed	Carbide black	Steel
18153*	500 lbs.	60" (L) x 23-3/4" (W) x 5-1/2" (H)	2" x 2"	Folding	Carbide black	Steel
18145	500 lbs.	46-1/2" (L) x 17-1/2" (W) x 5-1/2" (H)	1-1/4" x 1-1/4" 2" x 2" adapter	Fixed	Carbide black	Steel

* Rear-mounted spare tire may interfere with the folding feature

ROOF RACK CROSSBARS FOR JEEP WRANGLER

- Adds rooftop storage space on select hardtop Jeep models (see table below for application)
- Full-width slotted channels for adjustable positioning of straps, hooks or bolts
- Quick-release gutter clamps allow for no-drill, as-needed installation
- Welded steel with a durable carbide black powder coat finish for maximum rust resistance

Adds rooftop storage space on select hardtop Jeep models (see table below)

Full-width slotted channels for adjustable positioning of straps, hooks or bolts

Quick-release, gutter clamps allow for no-drill, as-needed installation

Part #	Years	Years	Capacity	Material	Finish
18119	Jeep Wrangler JK	07 - 18	150 lbs.	Welded steel	Carbide black
18122	Jeep Wrangler JL	18 - 22			
	Jeep Gladiator	20 - 22			

UNIVERSAL ROOF RACK CROSSBARS

- Lightweight, powder-coated aluminum
- Adjustable, universal design mounts to roof side rails with up to 50" span
- Integrated rubber strip on top of bars to protect and help secure cargo
- Compatible with CURT roof rack cargo carrier and kayak racks

Rubber-coated, key-operated twist knobs for enhanced security

Adjustable, universal design mounts to roof side rails with up to 50" span

Sleek, oval-shaped crossbars to match the OE style of modern vehicles

Part #	Capacity	Length	Width	Height	Includes
18118	150 lbs.	53-3/8"	2-1/8"	7/8" (2" installed)	Two crossbars and mounting hardware

EASILY ADJUSTS TO ACCEPT VIRTUALLY ANY SIZE KAYAK

ROOF RACK KAYAK HOLDERS

- Lightweight, powder-coated aluminum
- Notched pivot points for precise positioning and locking
- Universal brackets mount on any roof rack crossbars with no tools required
- Foam padding protects kayaks from scuffs and scratches
- Straps loop around the kayak for secure travel

18320

Rotating arms pivot to fit virtually any size kayak or paddleboard

Foam padding protects kayaks from scuffs and scratches

Arms fold in seconds for convenient, compact storage in the included bag

Part #	Capacity	Includes
18320	75 lbs.	Two holders, straps and mounting hardware

www.ariesautomotive.com

ROOF RACK CARGO CARRIER

- Frees up space inside the vehicle for passengers and cargo
- Mounts to most roof rack base rails
- Lightweight and easy to install with included mounting brackets
- Two-piece design easily bolts together for quick assembly

18115

18117

18117 packaging

18115 packaging

Mounts to most roof rack base rails and easily accepts a CURT cargo bag or net

Frees up the vehicle interior by providing nearly 11 sq. ft. of usable cargo space

Extension increases the storage area of the cargo basket by nearly six sq. ft.

Part #	Description	Capacity	Inside Dimensions	Storage Area	Finish	Material
18115	Roof basket	Limited to vehicle	41-1/2" (L) x 37" (W) x 4" (H)	10-5/8 sq-ft.	E-coat and carbide black	Steel
18117	Extension	Limited to vehicle	21" (L) x 37" (W) x 4" (H)	Adds 5-3/8 sq-ft.	E-coat and carbide black	Steel

CARGO BAGS

- Keeps cargo protected from water, dirt, wind damage and more
- Made from thick, 500 x 500 denier, UV-resistant vinyl
- Zippers feature large holes to accept a padlock
- Tie-down straps securely attach to cargo carrier frame
- Easily folds up for compact storage

Features welded seams to be highly weather-resistant, helping keep cargo dry

Lockable zipper enclosure with hook-and-loop flap helps keep the inside dry

Fits into CURT roof rack cargo carriers and most CURT hitch cargo carriers

18220

18221

18210 & 18211

Part #	Dimensions	Storage	Straps	Description	Yarn Count	Weight	Thickness
18210	56" x 18" x 21"	12.25 cubic feet	6	Cargo carrier bag	500 denier	600 grams per square meter	0.45mm - 0.55mm
18211	56" x 22" x 21"	15.00 cubic feet	6	Cargo carrier bag			
18220	38" x 34" x 18"	13.50 cubic feet	4	Roof rack cargo carrier cargo bag			
18221	59" x 34" x 18"	21 cubic feet	6	Roof rack cargo carrier cargo bag			

CARGO NETS

Elastic netting provides better cargo security compared to bungee cords

Attachment hooks feature holes for easy handling and installation

18202

Netted storage bag

Part #	Dimensions	Fits	Includes
18202	43" x 24"	60" wide carriers	Net and storage bag
18200	44" x 38"	Roof rack cargo carrier	Net and storage bag
18201	65" x 38"	Extended roof rack cargo carrier	Net and storage bag

CARGO STRAPS

- Cambuckle mechanism allows for quick, direct tension on lighter loads
- Ratchet mechanism allows for greater tension on heavy loads
- High-strength, woven nylon
- Cinching components protected by a durable yellow zinc-plated finish

Perfect for securing cargo in trailers, truck beds and more

Secures cargo better than bungee cords or rope

83036

83047

83048

83015 83016

83001 83002

83009 83010

83019 83020

83025 83026

83027 83028

Part #	Work Load	Break Strength	Quantity	Color	Length	Width	Hook Style	Hook Finish	Mechanism
83015	300 lbs.	900 lbs.	2	Dark green	15'	1"	S-hook	Rubber-coated	Cambuckle
83016	300 lbs.	900 lbs.	4	Dark green	16'	1"	S-hook	Rubber-coated	Cambuckle
83001	500 lbs.	1,500 lbs.	2	Red	10'	1"	S-hook	Rubber-coated	Ratchet
83002	500 lbs.	1,500 lbs.	4	Red	16'	1"	S-hook	Rubber-coated	Ratchet
83009*	500 lbs.	1,500 lbs.	2	Black	10'	1"	S-hook	Rubber-coated	Ratchet
83010*	500 lbs.	1,500 lbs.	4	Black	16'	1"	S-hook	Rubber-coated	Ratchet
83019	733 lbs.	2,200 lbs.	1	Blue	16'	1"	J-hook	Rubber-coated	Ratchet
83020	733 lbs.	2,200 lbs.	2	Blue	16'	1"	J-hook	Rubber-coated	Ratchet
83025*	1,100 lbs.	3,300 lbs.	1	Orange	16'	1"	J-hook	Rubber-coated	Ratchet
83026*	1,100 lbs.	3,300 lbs.	2	Orange	16'	1"	J-hook	Rubber-coated	Ratchet
83027	1,100 lbs.	3,300 lbs.	1	Lime green	16'	1"	S-hook	Rubber-coated	Ratchet
83028	1,100 lbs.	3,300 lbs.	2	Lime green	16'	1"	S-hook	Rubber-coated	Ratchet
83036	1,667 lbs.	5,000 lbs.	1	Yellow	14'	1-1/2"	J-hook	Yellow zinc-plated	Ratchet
83047	3,333 lbs.	10,000 lbs.	1	Yellow	27'	2"	J-hook	Yellow zinc-plated	Ratchet
83048	3,333 lbs.	10,000 lbs.	1	Yellow	27'	2"	Flat hook	Yellow zinc-plated	Ratchet

* Continued while supplies last

CAUTION: Use of adapters and extenders can reduce tongue weight or vertical load capacity of the vehicle's hitch. Products under 12" reduce load capacity by 25%. Products over 12" reduce load capacity by 50%.

2 INCH & 2½ INCH & 3 INCH TRAILER HITCH RECEIVER TUBE ADAPTERS & EXTENDERS

Adapters

- Adapts a receiver tube opening to a different size
- #45048 can be cut down from 34" to 24" and has integrated safety chain loops and electrical bracket

Extenders

- Solid steel shank for optimum strength

45785

45790

45770

45775

45013

45789

45791

45781

45795

45796

45048

Adds clearance for a trailer or hitch-mounted accessory (45791)

Moves coupling point farther from the vehicle to avoid obstructions

Measuring adapters and extenders

Length is measured between pin-holes, from center to center

Part #	Adapts From	Adapts To	GTW / TW	Weight Dist. GTW / TW	Length	Finish
Adapters						
45785	1-1/4"	2"	Not for towing use / 350 lbs.	--	6-1/4"	Gloss black
45790	1-1/4"	2"	Not for towing use / 350 lbs.	--	10"	Gloss black
45770	2"	1-1/4"	3,500 / 350 lbs.	--	4"	Gloss black
45775	2"	1-1/4"	3,500 / 350 lbs.	--	9-1/2"	Gloss black
45013	Vertical 2"	Standard 2"	5,000 / 500 lbs.	--	4-1/4"	Gloss black
45048	2-1/2"	2"	4,500 / 450 lbs.	6,000 / 600 lbs.	34"	Gloss black
			6,000 / 600 lbs.	8,000 / 800 lbs.	24"	
Extenders						
45789	--	--	Not for towing use / 350 lbs.	--	7"	Gloss black
45791	--	--	3,500 / 350 lbs.	--	8"	Gloss black
45781*	--	--	3,500 / 350 lbs.	--	8"	Gloss black
45795	--	--	3,500 / 350 lbs.	--	14"	Gloss black
45796	--	--	3,500 / 350 lbs.	--	18"	Gloss black

* Hollow shank

2 INCH SPECIALIZED ADAPTERS

- Fits any 2" x 2" receiver tube opening
- Top receiver increases ground clearance for a cargo carrier or other hitch-mounted accessories
- Top receiver not for towing use
- Provides two receiver tubes for multiple accessories, such as a cargo carrier and a ball mount (#45792)
- Ideal for carrying a bike rack while towing a trailer (#45810)

45794

45792

45810

45794 provides added ground clearance

45792 provides two receiver tubes

45810 provides a ball mount and receiver tube to tow a trailer and an additional accessory

Part #	Description	GTW / TW	Drop	Rise	Length	Hole Size	Finish
45794	Raised receiver adapter (only for use in the rise position)	Not for towing use / 350 lbs.	--	4-1/4"	5-1/4"	--	Gloss black
45792	Dual receiver extender with pin & clip	3,500 / 350 lbs.	--	5-13/16"	8"	--	Gloss black
45810	Multi-use ball mount with pin & clip	7,500 / 750 lbs.	2"	5-13/16"	12-1/4"	1"	Gloss black

3 INCH → 2½ INCH → 2 INCH REDUCER SLEEVES

- #45408 set reduces a 3" receiver tube opening to fit a 2" or 2-1/2" shank
- Limited to trailer hitch capacity

45405 - single

45408 - nested set

45409

45408 set includes two reducers to fit multiple accessories

Reduces the receiver tube opening to fit smaller shank sizes

Part #	Reduces From	Reduces To	Length	Finish
45405	2-1/2"	2"	5-1/2"	Carbide black
45409	3"	2-1/2"	6-1/4"	Carbide black
45408*	3"	2-1/2"	6-1/4"	Carbide black
	2-1/2"	2"		

* 2-1/2" to 2" inner sleeve only designed for 2-1/2" receiver tubes with 2-1/4" from the collar to the hitch pin hole

How to use a reducer sleeve

RINGS & TIE-DOWN ANCHORS

See adjacent page for part number table

Recessed rope rings

- Recessed design eliminates obstruction and provides a finished look
- Constructed from high-strength steel
- Mounting screws not included

83601

83710

83600

D-rings

- Constructed from high-strength steel
- Mounting screws not included

83740

83742

83732

83730

83731 two-pack

Backing plate

- Adds strength to tie-down anchors
- Constructed from high-strength steel
- Compatible with #83600, #83740 and #83742
- Mounting screws not included

83607

83740 & 83607

83600 & 83607

Trim ring

- Provides a clean, finished look for recessed plate #83710
- Helps protect plate edges from damage and corrosion

83720

83710 in 83720

Lashing rings

- Heavy-duty design with large opening offers a reliable anchoring point
- Raw finish allows for ready welding of mounting bracket
- Constructed from high-strength, forged steel

83750

83760

83770

83780

Adds attachment point to a trailer

RINGS & TIE-DOWN ANCHORS

Part #	Capacity	Break Strength	Finish	Base Size	Mount Hole Size	Mounting Hole Pattern	Ring I.D.	Ring Thickness
Recessed Rope Rings								
83710	1,000 lbs.	1,000 lbs	Zinc-plated	3-1/2" x 3-1/2"	1/4"	1-3/16"	1-1/8" x 1-5/8"	1/4"
83601	1,200 lbs.	1,200 lbs.	Zinc-plated	5" x 3-1/2"	1/4"	4-1/16" x 1/4"	1-3/8" x 1-7/8"	1/4"
83600	5,000 lbs.	7,000 lbs.	Zinc-plated	4-7/8" x 4-1/2"	3/8"	3-3/8" x 2-7/8"	1-1/2" x 1-1/2"	1/2"
D-Rings								
83730	1,200 lbs.	2,400 lbs.	Zinc-plated	2-1/4" x 13/16"	1/4"	1-1/2"	1" x 1-1/4"	1/4"
83731*	1,200 lbs.	2,400 lbs.	Zinc-plated	2-1/4" x 13/16"	1/4"	1-1/2"	1" x 1-1/4"	1/4"
83732	1,200 lbs.	2,400 lbs.	Stainless	2-1/4" x 13/16"	1/4"	1-1/2"	1" x 1-1/4"	1/4"
83740	3,600 lbs.	11,000 lbs.	Yellow zinc-plated	1-3/4" x 3-11/16" x 7/8"	7/16" square	2"	3" x 3"	1/2"
83742	3,600 lbs.	11,000 lbs.	Zinc-plated	1-3/4" x 3-11/16" x 7/8"	7/16" square	2"	3" x 3"	1/2"
Backing Plate and Trim Ring								
83720	--	--	Plastic	--	--	--	3" x 3"	3/8"
83607	--	--	Gloss black	6" x 6"	7/16"	3" x 3-1/4" (2" center)	--	--
Lashing Rings								
83750	6,100 lbs.	18,000 lbs.	Raw steel	2-1/4" x 1-5/8" x 1-1/4"	--	--	3" x 3"	5/8"
83760	8,833 lbs.	26,500 lbs.	Raw steel	2-1/4" x 1-5/8" x 1-1/4"	--	--	3" x 3"	3/4"
83770	15,587 lbs.	46,760 lbs.	Raw steel	2-1/4" x 2-1/8" x 1-3/4"	--	--	3" x 3"	1"
83780	15,587 lbs.	47,000 lbs.	Raw steel	2-1/4" x 2-1/8" x 1-3/4"	--	--	3" x 4"	1"

* Packaged two-pack

FOLD-AWAY ROPE HOOK

- Fold-away design eliminates obstruction and provides a finished look
- Includes mounting hardware

Folds out as needed and folds away to be unobtrusive

83060 83061

Bulk #	Pkg #	Capacity	Finish
83060	83061	1,200 lbs.	Chrome-plated

WELD-ON STAKE POCKET

- Perfectly sized to accept a 2x4 wood or metal stud
- Raw finish allows for ready welding
- Made in the USA

83072

Part #	Finish	Thickness	Inside Width	Inside Depth
83072	Raw	3/16"	3-1/2"	1-5/8"

REPLACEMENT PARTS

ACTIVELINK™ BIKE RACKS

19234

19244

19247

19246

19249

19245

19248

19268

Part #	Description	Fits
19234	Safety reflectors, qty 2	18415
19244	18" velcro straps, qty 4	18410, 18411, 18412
19246	Standard frame cushion slip-on pads, qty 2	18410, 18411
19247	Reflector caps, qty 2	18410, 18411
19249	Underslung frame cushion kit - Pads, qty 2 - M10 x 45mm bolts, qty 2 - M10 nylock nuts, qty 2 - M10 flat washers, qty 2	18412
19245	Orange shank sleeve, qty 1	18401, 18402

Part #	Description	Fits
19248	Clevis pin with lanyard, qty 1	18401, 18402, 18410, 18411, 18412
19268	Shank hardware kit - M12 x 85mm bolt, qty 1 - M12 nylock nut, qty 1 - M12 flat washer, qty 1 - 1/2" anti-rattle bolt, qty 1 - 1/2" flat washer, qty 1 - 1/2" lock washer, qty 1 - Anti-rattle clip, qty 1 - Clevis pin with lanyard, qty 1 - Hand wheel, qty 1	18401, 18402

ALUMINUM TRAY-STYLE BIKE RACK

19264

19265

19267

Part #	Description	Fits
19264	Wheel cradle kit - Wheel cradle, qty 1 - M8 x 35mm bolts, qty 2 - M8 nylock nuts, qty 2	18088
19265	Tire strap, qty 1	18088
19266-01	Keys - 201, qty 2	18088
19266-02	Keys - 301, qty 2	18088
19266-03	Keys - 202, qty 2	18088
19266-04	Keys - 302, qty 2	18088
19266-05	Keys - 203, qty 2	18088
19266-06	Keys - 303, qty 2	18088
19267	Tray end-caps, qty 2	18088

STEEL TRAY-STYLE BIKE RACKS

19238

19239

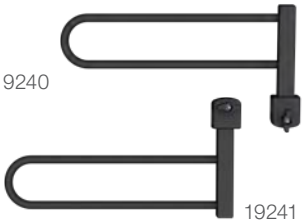
19240 19241

Part #	Description	Fits
19238	Short locking arm, qty 1	18085, 18087
19239	Long locking arm, qty 1	18085, 18087
19240	Right support arm, qty 1	18085, 18087
19241	Left support arm, qty 1	18085, 18087

HITCH-MOUNTED BIKE RACKS

18007

19290

Part #	Description	Fits
18007	Rubber cradle straps, qty 2	18020, 18021, 18030, 18064, 18065
19290	Anti-rattle bolt kit, qty 1	

ROOF RACK KAYAK HOLDERS

19235

Part #	Description	Fits
19235	1" x 9-1/2' tie down straps, qty 2	18320

CARGO CARRIERS

19263

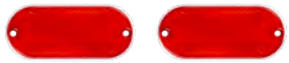
19234

19232

19236

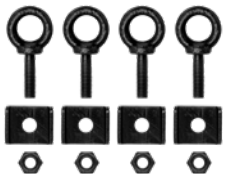
19233

Part #	Description	Fits
19232	Eye-bolt hardware kit - U-clips, qty 4 - M10 lock nuts, qty 6 - M10 x 45mm eye-bolts, qty 4 - M10 x 20mm eye-bolts, qty 2 - M10 flat washers, qty 2	18112
19233	Eye-bolt hardware kit - U-clips, qty 4 - M10 x 45mm eye-bolts, qty 4 - M10 lock nuts, qty 4	18113
19263	Anti-rattle hitch pin & clip, qty 1	18112
19234	Reflectors, qty 2	18112, 18113
19236	Basket assembly plates, qty 2	18150, 18151, 18152, 18153

ROOF RACK CARGO CARRIER

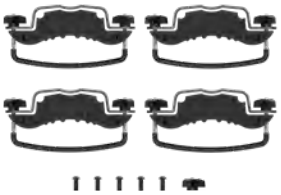
19231

19242

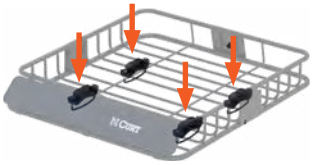

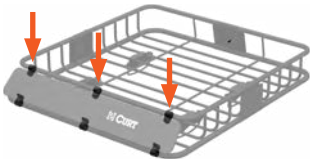

Part #	Description	Fits
19231	Roof rail hardware kit - Bracket plates, qty 4 - Bracket saddles, qty 4 - Knobs, qty 9 - M6 x 16mm bolts, qty 4 - M6 x 25mm bolts, qty 1 - U-bolts, qty 4	18115
19242	Fairing hardware kit - Small clips, qty 3 - Large clips, qty 3 - Plastic spacers, qty 3 - M6 x 25mm bolts, qty 4 - M6 x 40mm bolts, qty 3 - M6 lock nuts, qty 6	18115

MARKETING SUPPORT

CURT UNIVERSITY

CURT University is a self-service learning tool for CURT products and resources and provides easy access to nearly all of our marketing support materials. It is designed to educate our customers to enhance their sales and grow their business!

Scan or visit
curtmfg.com/university

POINT-OF-PURCHASE

Catalog

Poster

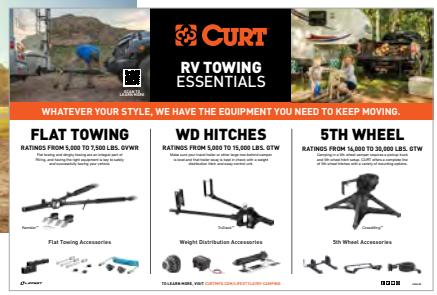

Counter mat

Trailer hitch display stand

Literature & Catalog

- Accordion-fold literature educates the consumer about the advantages of CURT product lines
- Accordion-fold: 8-1/2" x 3-1/2" finished size

Retail Signage

- Window stickers, indoor / outdoor signage and counter mats to help promote CURT products
- Header cards also available

Banners & Posters

- Bold graphics and clear lifestyle messaging to draw attention to your store
- Various options designed to promote your CURT product offering while educating your customers

Displays & Signage

- We offer a number of custom-built displays to furnish your store and showcase our products
- Choose from floor and countertop options
- 48" x 8" Lozier-ready header cards also available

PLANOGRAM SUPPORT

In-Store Planograms

CURT offers custom planogram services tailored to your needs. Whether pre-designed or custom, we can help provide a convenient retail solution for your store.

Please contact your sales representative for more information about sizes and options or to discuss custom planogram options.

Contact your sales representative for a complete list of available items and how to qualify.

TRAILER HITCHES & BASE PLATES LISTED NUMERICALLY

Part #	Years	Make / Model	Pallet Qty
11000	10-14	VOLKSWAGEN GOLF	40
11000	10-14	VOLKSWAGEN GTI	40
11001	10-16	MERCEDES-BENZ E350	13
11002	10-11	HONDA ACCORD CROSSTOUR	30
11002	12-15	HONDA CROSSTOUR	30
11006	07-12	DODGE CALIBER	40
11013	11-14	CADILLAC CTS	24
11019	10-13	KIA FORTE KOUP	24
11020	08-15	SMART FORTWO	26
11023	10-13	ACURA ZDX	24
11024	99-04	CHEVY TRACKER	44
11024	99-05	SUZUKI GRAND VITARA	44
11024	96-98	SUZUKI SIDEKICK	44
11025	11-14	HYUNDAI SONATA	30
11025	11-15	KIA OPTIMA	30
11028	06-15	MAZDA MX-5 MIATA	13
11030	12-13	MERCEDES-BENZ C250	13
11030	08-13	MERCEDES-BENZ C300	13
11030	08-13	MERCEDES-BENZ C350	13
11030	08-13	MERCEDES-BENZ C63 AMG	13
11031	07-10	KIA RONDO	26
11033	07-08	BMW 328XI	13
11033	07-08	BMW 335XI	13
11034	97-04	CHEVY CORVETTE	40
11037	08-16	AUDI A5 QUATTRO	28
11041	94-04	FORD MUSTANG	22
11047	10-15	LEXUS IS250	28
11048	10-11	FORD MUSTANG	36
11051	10-14	HONDA INSIGHT	28
11054	98-05	VOLKSWAGEN PASSAT	45
11055	11-12	FORD FIESTA	28
11058	07-08	HONDA FIT	50
11060	07-11	TOYOTA YARIS	60
11064	09-13	HONDA FIT	24
11065	11-13	VOLVO C70	30
11066	98-10	VOLKSWAGEN BEETLE	50
11066	99-06	VOLKSWAGEN GOLF	50
11066	07-09	VOLKSWAGEN GOLF CITY	50
11067	11-19	FORD FIESTA	22
11068	09-13	INFINITI G37	33
11068	14-14	INFINITI Q60	33
11070	99-05	VOLKSWAGEN JETTA	50
11073	11-14	MAZDA 2	26
11074	06-09	VOLKSWAGEN GTI	24
11074	06-09	VOLKSWAGEN RABBIT	24
11076	00-05	VOLKSWAGEN PASSAT	30
11077	11-16	HONDA CR-Z	44
11083	01-05	VOLKSWAGEN JETTA	30
11085	11-14	ACURA TSX	28
11085	08-12	HONDA ACCORD	28
11086	10-16	HYUNDAI GENESIS COUPE	20
11087	11-13	SCION TC	28
11088	11-17	NISSAN JUKE	32
11090	07-16	VOLKSWAGEN EOS	32
11091	09-17	VOLKSWAGEN CC	24
11091	06-10	VOLKSWAGEN PASSAT	24
11092	06-11	HYUNDAI ACCENT	30
11092	06-11	KIA RIO5	30
11094	06-11	HYUNDAI ACCENT	24
11094	06-11	KIA RIO	24
11096	07-10	VOLKSWAGEN PASSAT	34
11103	07-10	JEEP GRAND CHEROKEE	45
11105	91-02	FORD ESCORT	32
11105	91-99	MERCURY TRACER	32
11109	95-05	CHEVY CAVALIER	26
11109	95-05	PONTIAC SUNFIRE	26
11110	10-13	KIA SOUL	34
11111	11-13	INFINITI M37	22
11111	11-13	INFINITI M56	22
11111	14-19	INFINITI Q70	22
11115	03-07	SATURN ION	26
11117	82-02	CHEVY CAMARO	28
11117	82-02	PONTIAC FIREBIRD	28
11120	08-14	SUBARU IMPREZA	28

Part #	Years	Make / Model	Pallet Qty
11124	11-13	KIA FORTE	36
11126	02-08	MINI COOPER	30
11127	12-15	MAZDA 5	24
11128	98-98	CHEVY TRACKER	52
11128	89-97	GEO TRACKER	52
11128	89-98	SUZUKI SIDEKICK	52
11130	07-10	MINI COOPER	50
11132	01-10	CHRYSLER PT CRUISER	40
11133	11-14	CHRYSLER 200	28
11133	11-14	DODGE AVENGER	28
11134	11-14	SCION XD	50
11138	14-17	CHEVY SS	20
11138	08-09	PONTIAC G8	20
11141	96-05	TOYOTA RAV4	32
11147	94-01	ACURA INTEGRA	48
11158	12-18	FORD FOCUS	48
11159	96-04	ACURA RL	24
11160	07-11	MINI COOPER	44
11164	02-08	AUDI A4	50
11164	02-08	AUDI A4 QUATTRO	50
11164	04-08	AUDI S4	50
11164	03-04	VOLKSWAGEN PASSAT	50
11166	98-04	AUDI A6	30
11166	98-04	AUDI A6 QUATTRO	30
11166	01-05	AUDI ALLROAD QUATTRO	30
11174	00-00	BMW 323CI	50
11174	99-00	BMW 323I	50
11174	01-05	BMW 325CI	50
11174	01-05	BMW 325I	50
11174	01-05	BMW 325XI	50
11174	99-00	BMW 328I	50
11174	01-05	BMW 330CI	50
11174	01-05	BMW 330I	50
11174	01-05	BMW 330XI	50
11177	92-98	BMW 318I	40
11177	92-97	BMW 318IS	40
11177	98-99	BMW 323I	40
11177	98-99	BMW 323IS	40
11177	92-95	BMW 325I	40
11177	92-95	BMW 325IS	40
11177	96-99	BMW 328I	40
11177	96-99	BMW 328IS	40
11177	95-99	BMW M3	40
11178	00-00	BMW 323CI	30
11178	01-04	BMW 325CI	30
11178	01-04	BMW 330CI	30
11179	01-03	BMW 525I	45
11179	99-00	BMW 528I	45
11179	01-03	BMW 530I	45
11179	99-03	BMW 540I	45
11181	98-02	CHEVY PRIZM	60
11181	93-97	GEO PRIZM	60
11181	93-02	TOYOTA COROLLA	60
11184	11-11	BMW 1 SERIES M	24
11184	08-11	BMW 128I	24
11184	08-11	BMW 135I	24
11186	09-16	AUDI A4	24
11186	09-16	AUDI A4 QUATTRO	24
11187	95-02	CHRYSLER SEBRING	24
11187	95-00	DODGE AVENGER	24
11187	01-02	DODGE STRATUS	24
11188	10-16	AUDI A5	24
11188	08-16	AUDI A5 QUATTRO	24
11190	01-06	CHRYSLER SEBRING	40
11192	06-13	AUDI A3	40
11195	09-12	AUDI A4 QUATTRO	20
11195	13-16	AUDI ALLROAD	20
11196	11-15	CADILLAC CTS	6
11197	12-16	AUDI A7 QUATTRO	22
11198	04-09	HONDA S2000	22
11200	11-17	LEXUS CT200H	30
11202	09-14	NISSAN CUBE	30
11204	01-05	HONDA CIVIC	30
11205	94-97	HONDA ACCORD	28

Part #	Years	Make / Model	Pallet Qty
11207	97-00	ACURA EL	36
11207	92-00	HONDA CIVIC	36
11209	92-00	HONDA CIVIC	30
11210	11-14	FORD MUSTANG	24
11211	95-98	HONDA ODYSSEY	48
11211	96-99	ISUZU OASIS	48
11214	95-05	HYUNDAI ACCENT	48
11216	99-01	HYUNDAI SONATA	60
11216	01-05	KIA OPTIMA	60
11220	01-06	HYUNDAI ELANTRA	30
11221	11-15	CHEVY VOLT	26
11222	11-15	CHEVY CAMARO	40
11223	90-91	LEXUS ES250	100
11223	86-91	TOYOTA CAMRY	100
11223	86-89	TOYOTA CELICA	100
11223	89-92	TOYOTA COROLLA	100
11223	90-92	TOYOTA SUPRA	100
11227	89-92	GEO PRIZM	105
11227	90-94	LEXUS LS400	105
11227	90-99	TOYOTA CELICA	105
11227	87-92	TOYOTA COROLLA	105
11227	87-90	TOYOTA TERCEL	105
11232	12-15	VOLKSWAGEN PASSAT	24
11234	12-22	VOLKSWAGEN PASSAT	20
11238	98-05	LEXUS GS300	28
11238	98-00	LEXUS GS400	28
11238	01-05	LEXUS GS430	28
11239	83-92	MAZDA 626	40
11239	88-92	MAZDA MX-6	40
11240	12-20	CHEVY SONIC	22
11250	12-17	HYUNDAI ACCENT	30
11250	12-17	KIA RIO	30
11254	12-17	HYUNDAI VELOSTER	20
11255	95-96	NISSAN MAXIMA	40
11256	12-19	NISSAN VERSA	24
11257	91-94	NISSAN SENTRA	26
11258	12-16	CHEVY SONIC	20
11260	12-15	VOLKSWAGEN BEETLE	26
11261	97-98	NISSAN 200SX	44
11261	97-99	NISSAN SENTRA	44
11262	12-17	KIA RIO	44
11264	02-06	NISSAN ALTIMA	24
11264	04-08	NISSAN MAXIMA	24
11265	03-19	TOYOTA COROLLA	60
11270	12-12	VOLKSWAGEN BEETLE	24
11272	12-13	MINI COOPER	22
11276	10-15	TOYOTA PRIUS	40
11276	12-15	TOYOTA PRIUS PLUG-IN	40
11276	12-17	TOYOTA PRIUS V	40
11278	12-14	CHEVY ORLANDO	26
11280	03-06	SUBARU BAJA	60
11281	13-16	DODGE DART	26
11282	12-17	BUICK VERANO	30
11282	11-15	CHEVY CRUZE	30
11285	92-95	TOYOTA PASEO	26
11286	12-16	SUBARU IMPREZA	26
11286	13-15	SUBARU XV CROSSTREK	26
11289	00-05	TOYOTA CELICA	32
11289	00-05	TOYOTA ECHO	32
11290	01-03	ACURA CL	50
11290	99-03	ACURA TL	50
11290	98-07	HONDA ACCORD	50
11291	12-15	SCION IQ	28
11292	01-05	KIA RIO	40
11294	00-07	FORD FOCUS	38
11296	01-07	FORD FOCUS	32
11298	01-02	SATURN L100	50
11298	01-03	SATURN L200	50
11298	01-05	SATURN L300	50
11298	00-00	SATURN LW1	50
11298	00-00	SATURN LW2	50
11298	01-03	SATURN LW200	50
11298	01-03	SATURN LW300	50
11302	11-17	NISSAN JUKE	26

Part #	Years	Make / Model	Pallet Qty
11303	11-16	HYUNDAI ELANTRA	34
11303	13-14	HYUNDAI ELANTRA COUPE	34
11306	07-11	CHEVY AVEO5	48
11306	09-10	PONTIAC G3	48
11307	03-13	CADILLAC CTS	32
11307	05-11	CADILLAC STS	32
11308	03-05	MAZDA 6	40
11311	13-19	CADILLAC ATS	16
11312	05-08	FORD MUSTANG	36
11315	08-11	SUBARU IMPREZA	26
11317	08-14	SUBARU IMPREZA	24
11318	05-06	SAAB 9-2X	60
11318	93-07	SUBARU IMPREZA	60
11319	08-11	FORD FOCUS	13
11321	04-08	ACURA TL	35
11325	06-10	HYUNDAI SONATA	36
11326	03-11	SAAB 9-3	22
11327	03-07	HONDA ACCORD	32
11328	13-15	MITSUBISHI LANCER	30
11329	06-09	FORD FUSION	24
11329	07-09	LINCOLN MKZ	24
11329	06-06	LINCOLN ZEPHYR	24
11329	06-08	MAZDA 6	24
11329	06-09	MERCURY MILAN	24
11331	07-11	CHEVY AVEO	30
11333	11-16	MINI COOPER COUNTRYMAN	32
11334	13-15	CHEVY SPARK	36
11336	05-12	ACURA RL	40
11337	11-13	VOLVO C30	45
11338	06-10	MAZDA 5	32
11344	06-11	AUDI A6	20
11344	05-11	AUDI A6 QUATTRO	20
11347	12-18	FIAT 500	20
11348	07-12	NISSAN VERSA	36
11349	13-22	NISSAN SENTRA	24
11351	06-08	KIA MAGENTIS	48
11351	06-10	KIA OPTIMA	48
11352	07-23	NISSAN ALTIMA	32
11352	09-23	NISSAN MAXIMA	32
11354	12-19	VOLKSWAGEN BEETLE	28
11356	14-21	MAZDA 6	22
11359	09-13	MAZDA 6	24
11362	13-18	LEXUS ES300H	46
11362	13-18	LEXUS ES350	46
11363	12-19	FIAT 500	24
11364	14-17	FIAT 500L	22
11366	18-19	LEXUS GS300	26
11366	13-20	LEXUS GS350	26
11367	14-16	BMW 228I	26
11367	15-16	BMW 228I XDRIVE	26
11367	17-21	BMW 230I	26
11367	17-21	BMW 230I XDRIVE	26
11367	13-18	BMW 320I	26
11367	13-18	BMW 320I XDRIVE	26
11367	14-18	BMW 328D	26
11367	14-18	BMW 328D XDRIVE	26
11367	11-16	BMW 328I	26
11367	11-16	BMW 328I XDRIVE	26
11367	17-18	BMW 330I	26
11367	14-16	BMW 335I GT XDRIVE	26
11367	13-15	BMW 335I XDRIVE	26
11367	16-18	BMW 340I	26
11367	16-18	BMW 340I XDRIVE	26
11367	14-18	BMW 428I	26
11367	15-16	BMW 428I GRAN COUPE	26
11367	14-16	BMW 428I XDRIVE	26
11367	15-16	BMW 428I XDRIVE GRAN COUPE	26
11367	17-20	BMW 430I	26
11367	17-20	BMW 430I GRAN COUPE	26
11367	17-20	BMW 430I XDRIVE	26
11367	17-20	BMW 430I XDRIVE GRAN COUPE	26
11367	14-16	BMW 435I	26
11367	15-16	BMW 435I GRAN COUPE	26
11367	14-16	BMW 435I XDRIVE	26
11367	15-16	BMW 435I XDRIVE GRAN COUPE	26
11367	17-20	BMW 440I	26
11367	17-20	BMW 440I GRAN COUPE	26
11367	17-20	BMW 440I XDRIVE	26

Part #	Years	Make / Model	Pallet Qty
11367	17-20	BMW 440I XDRIVE GRAN COUPE	26
11367	17-20	BMW M240I	26
11367	17-20	BMW M240I XDRIVE	26
11368	14-18	KIA FORTE	24
11369	13-16	FORD FIESTA	30
11370	07-12	NISSAN SENTRA	40
11371	14-15	CHEVY CRUZE	24
11372	06-06	LEXUS GS300	24
11372	07-11	LEXUS GS350	24
11372	06-06	LEXUS GS430	24
11372	06-13	LEXUS IS250	24
11372	06-12	LEXUS IS350	24
11375	14-15	SCION TC	24
11376	14-14	MERCEDES-BENZ SLK250	20
11377	14-18	MAZDA 3	30
11378	14-19	NISSAN VERSA NOTE	24
11379	13-16	SCION FR-S	20
11379	13-20	SUBARU BRZ	20
11379	17-20	TOYOTA 86	20
11380	05-13	CHEVY CORVETTE	20
11381	11-16	BMW 535I	24
11381	11-16	BMW 535I XDRIVE	24
11381	11-16	BMW 550I	24
11381	11-14	BMW 550I XDRIVE	24
11382	14-15	CADILLAC CTS	24
11383	10-13	MAZDA 3	32
11386	04-09	MAZDA 3	30
11387	08-14	MINI COOPER	30
11389	16-17	LEXUS IS200T	30
11389	14-15	LEXUS IS250	30
11389	16-20	LEXUS IS300	30
11389	14-20	LEXUS IS350	30
11390	10-12	FORD FUSION	36
11390	10-12	LINCOLN MKZ	36
11390	10-11	MERCURY MILAN	36
11391	06-11	ACURA CSX	40
11391	13-22	ACURA ILX	40
11391	06-15	HONDA CIVIC	40
11393	10-13	MAZDA 3	30
11394	14-20	MITSUBISHI MIRAGE	22
11395	14-18	KIA FORTE5	30
11396	11-17	NISSAN LEAF	30
11398	13-16	CHEVY SONIC	22
11399	15-20	AUDI A3	40
11399	15-20	AUDI A3 QUATTRO	40
11400	13-17	HYUNDAI ELANTRA GT	50
11402	15-19	HYUNDAI SONATA	30
11402	16-20	KIA OPTIMA	30
11403	15-17	CHRYSLER 200	24
11404	14-16	MERCEDES-BENZ E350	13
11405	15-23	FORD MUSTANG	22
11406	15-20	HONDA FIT	28
11407	14-23	INFINITI Q50	20
11408	12-16	SUBARU IMPREZA	36
11408	15-20	SUBARU WRX	36
11408	15-20	SUBARU WRX STI	36
11410	15-15	VOLKSWAGEN JETTA	16
11411	15-15	VOLKS. GOLF SPORTWAGEN	20
11412	15-21	VOLKSWAGEN GOLF	52
11412	15-21	VOLKSWAGEN GTI	52
11413	16-16	MERCEDES-BENZ E350	36
11415	06-11	SAAB 9-3	26
11416	16-22	HONDA HR-V	24
11417	14-19	MINI COOPER	30
11418	16-21	MAZDA CX-3	30
11419	14-19	KIA SOUL	28
11420	16-16	SCION IM	24
11420	17-18	TOYOTA COROLLA IM	24
11421	16-16	SCION IA	24
11421	17-18	TOYOTA YARIS IA	24
11422	17-19	VOLKSWAGEN GOLF ALLTRACK	40
11422	15-19	VOLKS. GOLF SPORTWAGEN	40
11423	12-16	AUDI A6	28
11423	12-16	AUDI A6 QUATTRO	28
11424	17-18	HYUNDAI ELANTRA	28
11425	15-15	CHEVY CRUZE	24
11425	16-16	CHEVY CRUZE LIMITED	24
11427	05-12	TOYOTA AVALON	8

Part #	Years	Make / Model	Pallet Qty
11430	05-10	CHEVY COBALT	44
11430	05-06	PONTIAC PURSUIT	44
11431	13-18	FORD FOCUS	24
11433	16-22	CHEVY SPARK	24
11434	10-13	KIA FORTE	30
11435	16-23	MAZDA MX-5 MIATA	24
11436	16-19	CHEVY VOLT	32
11438	04-11	VOLVO S40	40
11438	05-11	VOLVO V50	40
11439	16-19	CHEVY CRUZE	24
11441	16-19	BUICK CASCADA	32
11443	10-13	SUZUKI SX4	32
11444	05-06	NISSAN X-TRAIL	30
11446	08-13	SUZUKI SX4	24
11447	05-10	CHEVY COBALT	28
11447	06-11	CHEVY HHR	28
11447	07-09	PONTIAC G5	28
11447	05-06	PONTIAC PURSUIT	28
11447	04-07	SATURN ION	28
11448	17-20	AUDI A4	24
11448	17-23	AUDI A4 ALLROAD	24
11448	17-23	AUDI A4 QUATTRO	24
11448	18-21	AUDI A5 QUATTRO	24
11448	18-21	AUDI A5 SPORTBACK	24
11448	18-23	AUDI S5	24
11448	18-23	AUDI S5 SPORTBACK	24
11449	17-20	MITSUBISHI MIRAGE G4	24
11453	15-17	NISSAN MICRA	24
11454	17-19	MERCEDES-BENZ E300	32
11454	20-23	MERCEDES-BENZ E350	32
11454	17-19	MERCEDES-BENZ E400	32
11454	20-23	MERCEDES-BENZ E450	32
11455	04-08	ACURA TSX	16
11457	17-23	CHEVY BOLT EV	36
11458	17-19	CHEVY CRUZE	24
11462	07-12	MITSUBISHI GALANT	30
11463	16-18	HONDA CIVIC	30
11464	17-20	CHEVY SONIC	24
11465	17-24	SUBARU IMPREZA	26
11466	17-22	SUBARU IMPREZA	24
11467	07-10	HYUNDAI ELANTRA	60
11468	04-09	TOYOTA PRIUS	36
11471	09-12	HYUNDAI ELANTRA	32
11473	16-22	TOYOTA PRIUS	24
11473	19-22	TOYOTA PRIUS AWD-E	24
11473	17-22	TOYOTA PRIUS PRIME	24
11474	10-14	VOLKSWAGEN GOLF	24
11474	05-18	VOLKSWAGEN JETTA	24
11477	03-08	HYUNDAI TIBURON	30
11478	17-23	BMW 530I	24
11478	17-23	BMW 530I XDRIVE	24
11478	17-23	BMW 540I	24
11478	17-23	BMW 540I XDRIVE	24
11479	08-17	MITSUBISHI LANCER	36
11480	07-19	TOYOTA YARIS	24
11482	03-06	INFINITI G35	30
11483	03-06	INFINITI G35	48
11483	04-05	NISSAN 350Z	48
11484	12-17	TOYOTA PRIUS C	24
11485	15-20	MERCEDES-BENZ C300	24
11486	17-20	HYUNDAI IONIQ	24
11487	04-06	SCION XB	32
11488	05-06	SCION XA	38
11489	16-18	FORD FOCUS	24
11490	18-22	TOYOTA C-HR	30
11492	17-18	CHEVY CRUZE	24
11493	08-13	INFINITI G37	44
11493	14-14	INFINITI Q60	44
11493	06-06	NISSAN 350Z	44
11496	09-14	ACURA TL	32
11496	09-14	ACURA TSX	32
11496	08-10	HONDA ACCORD	32
11497	05-06	SAAB 9-2X	24
11497	93-07	SUBARU IMPREZA	24
11498	04-07	BMW 525I	24
11498	06-07	BMW 525XI	24
11498	08-10	BMW 528I	24
11498	09-10	BMW 528I XDRIVE	24

Part #	Years	Make / Model	Pallet Qty
11498	08-08	BMW 528XI	24
11498	04-07	BMW 530I	24
11498	06-07	BMW 530XI	24
11498	08-10	BMW 535I	24
11498	10-10	BMW 535I GT	24
11498	09-10	BMW 535I XDRIVE	24
11498	08-08	BMW 535XI	24
11498	04-05	BMW 545I	24
11498	06-10	BMW 550I	24
11498	10-10	BMW 550I GT	24
11498	10-10	BMW 550I GT XDRIVE	24
11499	11-12	INFINITI G25	30
11499	07-08	INFINITI G35	30
11499	09-13	INFINITI G37	30
11509	18-20	HYUNDAI ELANTRA GT	24
11510	08-12	INFINITI EX35	30
11510	13-13	INFINITI EX37	30
11510	14-17	INFINITI QX50	30
11522	17-24	MINI COOPER COUNTRYMAN	24
11523	18-19	TOYOTA PRIUS C	24
11524	16-21	MINI COOPER CLUBMAN	24
11525	18-22	HONDA ACCORD	24
11527	13-22	BUICK ENCORE	32
11527	15-22	CHEVY TRAX	32
11529	18-22	HYUNDAI KONA	24
11530	18-23	BMW X2	24
11535	15-20	ACURA TLX	24
11540	19-23	VOLKSWAGEN JETTA	24
11548	18-20	HYUNDAI ACCENT	24
11550	19-21	HYUNDAI VELOSTER	24
11555	07-16	HONDA CR-V	30
11563	18-23	NISSAN KICKS	24
11564	15-19	VOLKSWAGEN GOLF R	24
11567	18-22	TOYOTA C-HR	24
11567	19-23	TOYOTA COROLLA	24
11575	20-23	KIA SOUL	24
11576	19-22	TOYOTA AVALON	24
11576	18-24	TOYOTA CAMRY	24
11578	21-24	KIA SELTOS	24
11581	17-23	TESLA 3	24
11591	16-23	HONDA CIVIC	24
11596	20-23	TOYOTA COROLLA	24
11599	20-23	MAZDA CX-30	24
11604	16-18	HONDA CIVIC	48
11609	20-23	HYUNDAI VENUE	30
11612	20-23	BUICK ENCORE GX	24
11612	21-23	CHEVY TRAILBLAZER	24
11615	19-19	KIA FORTE	24
11619	20-23	HYUNDAI SONATA	20
11620	20-23	KIA FORTE	24
11623	21-24	KIA K5	26
11630	21-23	HYUNDAI ELANTRA	24
11633	19-24	MAZDA 3	28
11636	19-21	MAZDA 3	28
11637	22-23	TOYOTA COROLLA CROSS	28
11638	22-23	HYUNDAI KONA	24
11638	22-23	HYUNDAI KONA N	24
11640	23-24	HONDA HR-V	48
11648	18-23	NISSAN LEAF	30
11679	05-09	KIA SPECTRA	28
11681	13-17	HONDA ACCORD	32
11700	03-11	HONDA ELEMENT	30
11701	03-09	MERCEDES-BENZ E320	40
11701	06-09	MERCEDES-BENZ E350	40
11701	03-06	MERCEDES-BENZ E500	40
11701	03-06	MERCEDES-BENZ E55 AMG	40
11701	07-09	MERCEDES-BENZ E550	40
11701	07-09	MERCEDES-BENZ E63 AMG	40
11703	90-96	NISSAN 300ZX	10
11704	89-92	FORD PROBE	30
11707	91-96	INFINITI G20	24
11712	77-88	PORSCHE 924	48
11712	83-91	PORSCHE 944	48
11713	91-95	TOYOTA MR2	32
11714	90-92	VOLKSWAGEN GOLF	52
11716	90-94	VOLKSWAGEN CORRADO	34
11721	88-89	MERCEDES-BENZ 190D	35
11721	88-93	MERCEDES-BENZ 190E	35

Part #	Years	Make / Model	Pallet Qty
11727	93-97	INFINITI J30	26
11728	93-95	MITSUBISHI DIAMANTE	30
11729	90-97	MAZDA MIATA	24
11730	94-98	SAAB 900	40
11733	75-79	JAGUAR XJ12	35
11733	75-87	JAGUAR XJ6	35
11733	76-93	JAGUAR XJS	35
11735	95-97	VOLKSWAGEN PASSAT	20
11736	95-97	VOLKSWAGEN PASSAT	40
11744	96-99	MERCEDES-BENZ E300	30
11744	96-02	MERCEDES-BENZ E320	30
11744	97-97	MERCEDES-BENZ E420	30
11744	98-02	MERCEDES-BENZ E430	30
11744	99-02	MERCEDES-BENZ E55 AMG	30
11746	90-97	MAZDA MIATA	24
11749	99-05	MAZDA MIATA	30
11754	99-02	SAAB 9-3	40
11756	07-10	BMW 335I	13
11756	07-08	BMW 335XI	13
11768	02-06	HONDA CR-V	32
11772	96-99	INFINITI I30	33
11772	97-99	NISSAN MAXIMA	33
11773	01-03	ACURA MDX	60
11773	03-03	HONDA PILOT	60
11801	90-96	INFINITI Q45	24
11804	88-91	MAZDA 929	32
11807	81-86	SAAB 900	35
11811	89-98	SAAB 9000	33
11815	94-96	MERCEDES-BENZ C220	48
11815	97-00	MERCEDES-BENZ C230	48
11815	94-00	MERCEDES-BENZ C280	48
11815	95-97	MERCEDES-BENZ C36 AMG	48
11815	98-00	MERCEDES-BENZ C43 AMG	48
11815	98-03	MERCEDES-BENZ CLK320	48
11815	99-03	MERCEDES-BENZ CLK430	48
11815	03-03	MERCEDES-BENZ CLK500	48
11815	01-03	MERCEDES-BENZ CLK55 AMG	48
11816	88-93	MERCEDES-BENZ 300CE	24
11816	87-93	MERCEDES-BENZ 300D	24
11816	86-93	MERCEDES-BENZ 300E	24
11816	92-93	MERCEDES-BENZ 400E	24
11821	99-08	SAAB 9-5	28
11822	00-04	VOLVO S40	40
11822	00-04	VOLVO V40	40
11823	06-06	MERCEDES-BENZ S350	24
11823	00-06	MERCEDES-BENZ S430	24
11823	00-06	MERCEDES-BENZ S500	24
11823	01-06	MERCEDES-BENZ S600	24
11824	03-07	MERCEDES-BENZ C230	30
11824	01-05	MERCEDES-BENZ C240	30
11824	06-07	MERCEDES-BENZ C280	30
11824	02-04	MERCEDES-BENZ C32 AMG	30
11824	01-05	MERCEDES-BENZ C320	30
11824	06-07	MERCEDES-BENZ C350	30
11824	05-06	MERCEDES-BENZ C55 AMG	30
11824	06-06	MERCEDES-BENZ CLS500	30
11824	06-06	MERCEDES-BENZ CLS55 AMG	30
11824	07-07	MERCEDES-BENZ CLS550	30
11824	07-07	MERCEDES-BENZ CLS63 AMG	30
11830	98-03	MERCEDES-BENZ E320	24
11900	14-19	CADILLAC CTS	24
11900	16-24	CHEVY CAMARO	24
12002	06-13	SUZUKI GRAND VITARA	24
12004	07-09	ACURA RDX	24
12005	78-81	BUICK CENTURY	20
12005	78-87	BUICK REGAL	20
12005	78-87	CHEVY EL CAMINO	20
12005	77-88	CHEVY MONTE CARLO	20
12005	82-83	OLDSMOBILE CUTLASS CIERA	20
12005	78-88	OLDS. CUTLASS SUPREME	20
12005	82-86	PONTIAC BONNEVILLE	20
12005	78-87	PONTIAC GRAND PRIX	20
12005	78-81	PONTIAC LEMANS	20
12009	71-73	BUICK CENTURION	30
12009	77-84	BUICK ELECTRA	30
12009	77-85	BUICK LESABRE	30
12009	92-96	BUICK ROADMASTER	30
12009	77-96	CHEVY CAPRICE	30

Part #	Years	Make / Model	Pallet Qty
12009	80-84	OLDSMOBILE 98	30
12009	80-80	OLDSMOBILE DELTA 88	30
12009	83-86	PONTIAC PARISIENNE	30
12011	83-04	CHEVY S10	24
12011	83-90	GMC S15	24
12011	91-04	GMC SONOMA	24
12012	83-11	FORD RANGER	22
12012	94-09	MAZDA B2300	22
12012	94-07	MAZDA B3000	22
12012	94-09	MAZDA B4000	22
12013	03-08	TOYOTA MATRIX	24
12022	10-11	BUICK LUCERNE	30
12027	04-05	CHEVY CLASSIC	30
12027	97-03	CHEVY MALIBU	30
12027	97-99	OLDSMOBILE CUTLASS	30
12028	00-07	CHEVY MONTE CARLO	14
12030	10-15	HYUNDAI TUCSON	28
12030	11-15	KIA SPORTAGE	28
12031	99-17	HONDA ODYSSEY	52
12035	02-04	CHRYSLER CONCORDE	20
12035	99-01	CHRYSLER LHS	20
12036	07-14	FORD EDGE	44
12036	07-15	LINCOLN MKX	44
12038	98-08	SUBARU FORESTER	50
12040	99-04	OLDSMOBILE ALERO	18
12040	99-05	PONTIAC GRAND AM	18
12041	77-83	BUICK ESTATE WAGON	30
12041	85-90	BUICK LESABRE	30
12041	91-96	BUICK ROADMASTER	30
12041	77-96	CHEVY CAPRICE	30
12041	77-92	OLDSMOBILE CUSTOM CRUISER	30
12041	83-86	PONTIAC PARISIENNE	30
12044	00-05	BUICK LESABRE	30
12044	06-09	BUICK LUCERNE	30
12044	01-03	OLDSMOBILE AURORA	30
12044	00-05	PONTIAC BONNEVILLE	30
12047	09-13	SUBARU FORESTER	46
12048	11-23	MITSUBISHI OUTLANDER SPORT	28
12048	11-23	MITSUBISHI RVR	28
12049	91-96	BUICK PARK AVENUE	24
12049	91-96	OLDSMOBILE 98	24
12049	97-97	OLDSMOBILE REGENCY	24
12051	08-12	CHEVY MALIBU	20
12051	07-09	SATURN AURA	20
12053	89-97	FORD THUNDERBIRD	26
12053	93-98	LINCOLN MARK VIII	26
12053	89-97	MERCURY COUGAR	26
12055	97-99	CADILLAC DEVILLE	18
12057	11-17	JEEP COMPASS	32
12057	11-17	JEEP PATRIOT	32
12058	00-05	CADILLAC DEVILLE	28
12058	06-11	CADILLAC DTS	28
12060	05-12	FORD ESCAPE	24
12060	05-11	MAZDA TRIBUTE	24
12060	05-11	MERCURY MARINER	24
12064	11-22	CHRYSLER 300	48
12064	11-23	DODGE CHALLENGER	48
12064	11-15	DODGE CHARGER	48
12065	04-20	TOYOTA SIENNA	30
12066	11-18	VOLVO S60	20
12066	15-18	VOLVO V60	20
12066	15-18	VOLVO V60 CROSS COUNTRY	20
12066	08-10	VOLVO V70	20
12066	09-16	VOLVO XC70	20
12070	10-16	CADILLAC SRX	22
12073	92-98	BUICK SKYLARK	18
12073	92-98	OLDSMOBILE ACHIEVA	18
12073	92-98	PONTIAC GRAND AM	18
12076	10-13	FORD TRANSIT CONNECT	24
12083	13-18	ACURA RDX	26
12086	09-16	HYUNDAI GENESIS	24
12088	09-16	LINCOLN MKS	28
12089	86-97	FORD AEROSTAR	24
12091	13-20	FORD FUSION	24
12091	13-20	LINCOLN MKZ	24
12092	13-18	FORD C-MAX	26
12093	07-12	MAZDA CX-7	24
12094	96-07	CHRYSLER TOWN & COUNTRY	40

Part #	Years	Make / Model	Pallet Qty
12094	96-07	DODGE CARAVAN	40
12094	96-00	PLYMOUTH VOYAGER	40
12095	12-15	CHEVY CAPTIVA SPORT	24
12095	08-10	SATURN VUE	24
12096	15-19	LINCOLN MKC	8
12097	09-17	VOLKSWAGEN TIGUAN	72
12100	14-18	SUBARU FORESTER	32
12102	99-02	MERCURY VILLAGER	24
12102	99-02	NISSAN QUEST	24
12107	13-18	TOYOTA AVALON	20
12107	12-17	TOYOTA CAMRY	20
12108	06-18	TOYOTA RAV4	30
12110	04-08	TOYOTA SOLARA	36
12111	13-19	FORD ESCAPE	26
12112	07-15	MAZDA CX-9	24
12113	13-18	HYUNDAI SANTA FE SPORT	26
12113	14-15	KIA SORENTO	26
12114	12-17	LEXUS LS460	24
12115	10-16	BUICK LACROSSE	8
12115	11-17	BUICK REGAL	8
12115	13-19	CADILLAC XTS	8
12115	14-20	CHEVY IMPALA	8
12115	13-15	CHEVY MALIBU	8
12115	16-16	CHEVY MALIBU LIMITED	8
12116	14-16	KIA RONDO	28
12118	14-19	KIA CADENZA	30
12122	08-20	NISSAN ROGUE	24
12122	14-15	NISSAN ROGUE SELECT	24
12123	14-23	FORD TRANSIT CONNECT	28
12126	05-09	HYUNDAI TUCSON	24
12126	05-10	KIA SPORTAGE	24
12130	87-91	FORD COUNTRY SQUIRE	40
12130	92-11	FORD CROWN VICTORIA	40
12130	80-83	LINCOLN MARK VI	40
12130	81-11	LINCOLN TOWN CAR	40
12130	87-91	MERCURY COLONY PARK	40
12130	80-09	MERCURY GRAND MARQUIS	40
12130	03-04	MERCURY MARAUDER	40
12134	09-20	DODGE JOURNEY	56
12136	14-19	SUBARU OUTBACK	24
12137	84-01	JEEP CHEROKEE	24
12138	15-15	JEEP RENEGADE	26
12140	15-24	FORD EDGE	26
12142	15-23	JEEP RENEGADE	26
12143	15-16	LEXUS NX200T	24
12143	15-16	LEXUS NX300H	24
12148	15-18	AUDI Q3	30
12148	15-18	AUDI Q3 QUATTRO	30
12154	18-21	MITSUBISHI ECLIPSE CROSS	24
12156	16-22	MAZDA CX-9	24
12157	97-05	BUICK PARK AVENUE	20
12158	17-22	KIA SPORTAGE	24
12163	16-18	MERCEDES-BENZ CLA250	24
12164	17-19	FORD FUSION	24
12164	17-17	LINCOLN MKZ	24
12165	17-20	GENESIS G80	24
12165	17-19	GENESIS G90	24
12165	12-16	HYUNDAI GENESIS	24
12169	17-24	HONDA CR-V	24
12170	13-23	MAZDA CX-5	26
12171	17-22	KIA NIRO	24
12172	17-17	LEXUS NX200T	24
12172	18-21	LEXUS NX300	24
12172	17-21	LEXUS NX300H	24
12173	18-20	BUICK REGAL TOURX	24
12174	17-23	JEEP COMPASS	24
12175	18-24	HONDA ODYSSEY	52
12177	18-23	VOLKSWAGEN TIGUAN	24
12180	17-23	CHRYSLER PACIFICA	24
12180	20-22	CHRYSLER VOYAGER	24
12181	87-89	DODGE RAIDER	70
12181	89-94	ISUZU AMIGO	70
12181	88-91	ISUZU TROOPER	70
12181	83-00	MITSUBISHI MONTERO	70
12181	91-97	TOYOTA LAND CRUISER	70
12182	17-20	LINCOLN CONTINENTAL	24
12184	18-24	SUBARU FORESTER	24
12185	18-20	BUICK REGAL SPORTBACK	22

Part #	Years	Make / Model	Pallet Qty
12185	16-24	CHEVY MALIBU	22
12188	18-22	FORD ECOSPORT	24
12189	07-10	CHRYSLER SEBRING	24
12189	08-10	DODGE AVENGER	24
12198	19-23	SUBARU FORESTER	24
12200	19-23	TOYOTA RAV4	24
12201	18-24	CHEVY EQUINOX	20
12201	18-24	GMC TERRAIN	20
12202	21-23	NISSAN ROGUE	24
12203	23-24	MAZDA CX-50	24
12207	74-74	VOLVO 142	30
12207	74-74	VOLVO 144	30
12207	74-74	VOLVO 145	30
12207	74-75	VOLVO 164	30
12207	90-93	VOLVO 240	30
12207	75-84	VOLVO 242	30
12207	75-89	VOLVO 244	30
12207	75-89	VOLVO 245	30
12207	76-81	VOLVO 262	30
12207	76-82	VOLVO 264	30
12207	76-81	VOLVO 265	30
12209	85-92	VOLVO 740	32
12209	83-90	VOLVO 760	32
12209	88-90	VOLVO 780	32
12209	91-95	VOLVO 940	32
12209	92-94	VOLVO 960	32
12211	93-97	VOLVO 850	36
12211	98-02	VOLVO C70	36
12211	98-00	VOLVO S70	36
12211	98-00	VOLVO V70	36
12217	93-03	VOLKSWAGEN EUROVAN	13
12217	93-94	VOLKSWAGEN TRANSPORTER	13
12221	03-10	PONTIAC VIBE	48
12221	03-13	TOYOTA MATRIX	48
12225	97-04	BUICK REGAL	20
12225	97-08	PONTIAC GRAND PRIX	20
12228	09-10	PONTIAC VIBE	36
12228	09-13	TOYOTA MATRIX	36
12231	01-06	LEXUS LS430	30
12232	86-07	FORD TAURUS	20
12232	88-94	LINCOLN CONTINENTAL	20
12232	86-05	MERCURY SABLE	20
12233	92-99	BUICK LESABRE	26
12233	92-95	OLDSMOBILE 88	26
12233	92-95	PONTIAC BONNEVILLE	26
12234	03-08	PONTIAC VIBE	58
12237	95-02	KIA SPORTAGE	24
12239	05-09	BUICK ALLURE	24
12239	97-05	BUICK CENTURY	24
12239	05-09	BUICK LACROSSE	24
12239	98-02	OLDSMOBILE INTRIGUE	24
12240	05-10	CHRYSLER 300	64
12240	08-10	DODGE CHALLENGER	64
12240	06-10	DODGE CHARGER	64
12240	05-08	DODGE MAGNUM	64
12241	16-21	HYUNDAI TUCSON	32
12242	05-07	FORD FIVE HUNDRED	52
12242	05-07	FORD FREESTYLE	52
12242	08-09	FORD TAURUS	52
12242	08-08	FORD TAURUS X	52
12242	05-07	MERCURY MONTEGO	52
12242	08-08	MERCURY SABLE	52
12245	08-12	JEEP LIBERTY	22
12252	00-13	CHEVY IMPALA	20
12252	14-16	CHEVY IMPALA LIMITED	20
12253	00-06	LINCOLN LS	24
12255	07-10	JEEP COMPASS	48
12255	07-10	JEEP PATRIOT	48
12262	04-06	CHRYSLER PACIFICA	20
12264	08-16	CHRYSLER TOWN & COUNTRY	22
12264	08-20	DODGE GRAND CARAVAN	22
12264	12-15	RAM C/V	22
12264	09-14	VOLKSWAGEN ROUTAN	22
12265	98-04	CADILLAC SEVILLE	24
12270	90-04	SUBARU LEGACY	32
12270	00-04	SUBARU OUTBACK	32
12272	04-07	CHEVY MALIBU	26
12280	04-07	CHEVY MALIBU	34

Part #	Years	Make / Model	Pallet Qty
12284	05-09	SUBARU LEGACY	30
12284	05-09	SUBARU OUTBACK	30
12287	07-14	VOLVO S80	24
12288	00-06	MAZDA MPV	32
12289	04-07	CHRYSLER TOWN & COUNTRY	32
12289	04-07	DODGE CARAVAN	32
12289	04-07	DODGE GRAND CARAVAN	32
12290	15-19	SUBARU LEGACY	26
12290	10-13	SUBARU OUTBACK	26
12291	05-17	CHEVY EQUINOX	48
12291	10-17	GMC TERRAIN	48
12291	06-09	PONTIAC TORRENT	48
12291	02-07	SATURN VUE	48
12293	03-06	MITSUBISHI OUTLANDER	24
12296	10-19	FORD TAURUS	52
12298	10-14	SUBARU LEGACY	32
12304	91-97	TOYOTA PREVIA	24
12318	01-09	VOLVO S60	40
12318	01-07	VOLVO V70	40
12318	03-07	VOLVO XC70	40
12333	05-10	PONTIAC G6	24
12339	97-03	LEXUS ES300	48
12339	04-06	LEXUS ES330	48
12339	95-04	TOYOTA AVALON	48
12339	97-06	TOYOTA CAMRY	48
12339	99-03	TOYOTA SOLARA	48
12341	09-15	TOYOTA VENZA	30
12343	07-12	LEXUS ES350	52
12343	07-11	TOYOTA CAMRY	52
12362	96-07	CHRYSLER TOWN & COUNTRY	24
12362	04-07	DODGE CARAVAN	24
12362	96-00	PLYMOUTH VOYAGER	24
12490	08-15	SCION XB	30
13000	10-16	LINCOLN MKT	40
13001	06-13	SUZUKI GRAND VITARA	24
13002	10-16	CADILLAC SRX	44
13010	10-11	MERCEDES-BENZ G55 AMG	48
13010	10-15	MERCEDES-BENZ G550	48
13011	84-90	FORD BRONCO II	24
13013	95-04	TOYOTA TACOMA	24
13014	99-16	FORD F-250 SUPER DUTY	16
13014	99-16	FORD F-350 SUPER DUTY	16
13015	99-03	DODGE RAM 1500 VAN	26
13015	99-03	DODGE RAM 2500 VAN	26
13015	99-03	DODGE RAM 3500 VAN	26
13016	78-95	CHEVY G10	22
13016	78-95	CHEVY G20	22
13016	78-96	CHEVY G30	22
13016	78-78	GMC G15	22
13016	79-95	GMC G1500	22
13016	78-78	GMC G25	22
13016	79-95	GMC G2500	22
13016	78-78	GMC G35	22
13016	79-96	GMC G3500	22
13017	73-86	CHEVY C10 SUBURBAN	20
13017	73-86	CHEVY C20 SUBURBAN	20
13017	88-91	CHEVY C2500	20
13017	73-86	CHEVY K20 SUBURBAN	20
13017	87-88	CHEVY R10 SUBURBAN	20
13017	89-91	CHEVY R1500 SUBURBAN	20
13017	87-88	CHEVY R20 SUBURBAN	20
13017	89-91	CHEVY R2500 SUBURBAN	20
13017	75-78	GMC C15 SUBURBAN	20
13017	73-74	GMC C15/C1500 SUBURBAN	20
13017	79-86	GMC C1500 SUBURBAN	20
13017	75-78	GMC C25 SUBURBAN	20
13017	73-74	GMC C25/C2500 SUBURBAN	20
13017	79-91	GMC C2500	20
13017	79-86	GMC C2500 SUBURBAN	20
13017	75-78	GMC K15 SUBURBAN	20
13017	79-86	GMC K1500 SUBURBAN	20
13017	75-78	GMC K25 SUBURBAN	20
13017	73-74	GMC K25/K2500 SUBURBAN	20
13017	79-86	GMC K2500 SUBURBAN	20
13017	87-91	GMC R1500 SUBURBAN	20
13017	87-91	GMC R2500 SUBURBAN	20
13018	98-02	MERCEDES-BENZ ML320	80
13018	03-05	MERCEDES-BENZ ML350	80

Part #	Years	Make / Model	Pallet Qty
13018	99-01	MERCEDES-BENZ ML430	80
13018	02-05	MERCEDES-BENZ ML500	80
13019	83-11	FORD RANGER	24
13019	94-09	MAZDA B2300	24
13019	94-07	MAZDA B3000	24
13019	94-09	MAZDA B4000	24
13020	95-04	CHEVY BLAZER	40
13020	95-01	GMC JIMMY	40
13020	96-04	OLDSMOBILE BRAVADA	40
13021	83-04	CHEVY S10	20
13021	83-90	GMC S15	20
13021	91-04	GMC SONOMA	20
13021	96-00	ISUZU HOMBRE	20
13024	87-91	TOYOTA 4RUNNER	13
13028	75-86	CHEVY C10	24
13028	75-86	CHEVY C20	24
13028	88-00	CHEVY C2500	24
13028	75-86	CHEVY C30	24
13028	88-00	CHEVY C3500	24
13028	91-02	CHEVY C3500HD	24
13028	75-86	CHEVY K10	24
13028	75-86	CHEVY K20	24
13028	88-00	CHEVY K2500	24
13028	75-86	CHEVY K30	24
13028	88-00	CHEVY K3500	24
13028	99-99	CHEVY SILVERADO 2500	24
13028	01-06	CHEVY SILVERADO 3500	24
13028	07-07	CHEVY SILVERADO 3500 CLAS.	24
13028	75-79	FORD F-250	24
13028	73-97	FORD F-350	24
13028	88-97	FORD F-SUPER DUTY	24
13028	75-78	GMC C15	24
13028	79-86	GMC C1500	24
13028	75-78	GMC C25	24
13028	79-00	GMC C2500	24
13028	75-78	GMC C35	24
13028	79-00	GMC C3500	24
13028	91-02	GMC C3500HD	24
13028	75-78	GMC K15	24
13028	79-86	GMC K1500	24
13028	75-78	GMC K25	24
13028	79-00	GMC K2500	24
13028	75-78	GMC K35	24
13028	79-00	GMC K3500	24
13028	99-99	GMC SIERRA 2500	24
13028	01-06	GMC SIERRA 3500	24
13028	07-07	GMC SIERRA 3500 CLASSIC	24
13029	99-00	CADILLAC ESCALADE	24
13029	92-94	CHEVY BLAZER	24
13029	92-99	CHEVY C1500 SUBURBAN	24
13029	92-99	CHEVY C2500 SUBURBAN	24
13029	92-99	CHEVY K1500 SUBURBAN	24
13029	92-99	CHEVY K2500 SUBURBAN	24
13029	00-00	CHEVY SUBURBAN 1500	24
13029	00-00	CHEVY SUBURBAN 2500	24
13029	95-00	CHEVY TAHOE	24
13029	92-00	GMC YUKON	24
13032	86-97	FORD AEROSTAR	20
13033	91-01	FORD EXPLORER	44
13033	01-03	FORD EXPLORER SPORT	44
13033	91-94	MAZDA NAVAJO	44
13033	97-01	MERCURY MOUNTAINEER	44
13035	85-05	CHEVY ASTRO	13
13035	85-05	GMC SAFARI	13
13038	97-04	FORD F-150	16
13038	04-04	FORD F-150 HERITAGE	16
13038	97-99	FORD F-250	16
13040	96-14	CHEVY EXPRESS 1500	28
13040	96-24	CHEVY EXPRESS 2500	28
13040	96-24	CHEVY EXPRESS 3500	28
13040	96-14	GMC SAVANA 1500	28
13040	96-24	GMC SAVANA 2500	28
13040	96-24	GMC SAVANA 3500	28
13041	78-80	DODGE B100	26
13041	81-94	DODGE B150	26
13041	95-97	DODGE B1500	26
13041	78-80	DODGE B200	26
13041	81-94	DODGE B250	26

Part #	Years	Make / Model	Pallet Qty
13041	95-97	DODGE B2500	26
13041	78-80	DODGE B300	26
13041	81-94	DODGE B350	26
13041	95-97	DODGE B3500	26
13042	88-98	CHEVY C1500	18
13042	88-00	CHEVY C2500	18
13042	88-00	CHEVY C3500	18
13042	91-00	CHEVY C3500HD	18
13042	99-00	CHEVY SILVERADO 2500	18
13042	88-98	GMC C1500	18
13042	88-00	GMC C2500	18
13042	88-00	GMC C3500	18
13042	91-00	GMC C3500HD	18
13042	99-00	GMC SIERRA 2500	18
13043	10-23	LEXUS GX460	90
13044	02-07	JEEP LIBERTY	22
13045	93-98	TOYOTA T100	24
13046	06-07	SUBARU B9 TRIBECA	35
13046	08-10	SUBARU TRIBECA	35
13048	93-98	JEEP GRAND CHEROKEE	24
13049	97-02	FORD EXPEDITION	22
13049	98-02	LINCOLN NAVIGATOR	22
13050	04-09	CADILLAC SRX	16
13051	99-04	JEEP GRAND CHEROKEE	26
13052	08-15	LAND ROVER LR2	24
13053	03-06	FORD E-150	26
13053	75-02	FORD E-150 ECONOLINE	26
13053	03-06	FORD E-250	26
13053	75-02	FORD E-250 ECONOLINE	26
13053	75-98	FORD E-350 ECONOLINE	26
13053	99-06	FORD E-350 SUPER DUTY	26
13055	03-14	FORD E-150	28
13055	00-02	FORD E-150 ECONOLINE	28
13055	03-14	FORD E-250	28
13055	00-02	FORD E-250 ECONOLINE	28
13055	00-14	FORD E-350 SUPER DUTY	28
13056	98-03	DODGE DURANGO	18
13061	11-14	CHEVY SILVERADO 2500 HD	14
13061	11-14	CHEVY SILVERADO 3500 HD	14
13061	11-14	GMC SIERRA 2500 HD	14
13061	11-14	GMC SIERRA 3500 HD	14
13062	11-14	CHEVY SILVERADO 2500 HD	16
13062	11-14	CHEVY SILVERADO 3500 HD	16
13062	11-14	GMC SIERRA 2500 HD	16
13062	11-14	GMC SIERRA 3500 HD	16
13064	98-99	NISSAN FRONTIER	24
13065	11-21	JEEP GRAND CHEROKEE	24
13065	22-22	JEEP GRAND CHEROKEE WK	24
13066	10-15	HYUNDAI TUCSON	48
13066	11-15	KIA SPORTAGE	48
13067	07-14	FORD EDGE	26
13067	07-15	LINCOLN MKX	26
13068	99-17	HONDA ODYSSEY	52
13069	11-14	SUBARU TRIBECA	34
13072	07-09	CHRYSLER ASPEN	70
13072	04-09	DODGE DURANGO	70
13073	10-12	HYUNDAI SANTA FE	56
13073	11-13	KIA SORENTO	56
13076	10-13	FORD TRANSIT CONNECT	24
13077	07-18	BMW X5	26
13077	14-19	BMW X6	26
13078	11-17	NISSAN QUEST	24
13079	11-23	MITSUBISHI OUTLANDER SPORT	26
13079	11-23	MITSUBISHI RVR	26
13081	11-17	JEEP COMPASS	48
13081	11-17	JEEP PATRIOT	48
13082	88-99	CHEVY C1500	18
13082	88-00	CHEVY C2500	18
13082	88-00	CHEVY C3500	18
13082	88-99	CHEVY K1500	18
13082	88-00	CHEVY K2500	18
13082	88-00	CHEVY K3500	18
13082	88-99	GMC C1500	18
13082	88-00	GMC C2500	18
13082	88-00	GMC C3500	18
13082	88-99	GMC K1500	18
13082	88-00	GMC K2500	18
13082	88-00	GMC K3500	18

Part #	Years	Make / Model	Pallet Qty
13083	83-94	CHEVY S10 BLAZER	48
13083	92-94	GMC JIMMY	48
13083	83-91	GMC S15 JIMMY	48
13083	91-94	OLDSMOBILE BRAVADA	48
13084	84-01	JEEP CHEROKEE	44
13085	95-03	FORD WINDSTAR	24
13086	84-95	TOYOTA PICKUP	13
13087	96-02	TOYOTA 4RUNNER	24
13088	97-03	INFINITI QX4	24
13088	96-04	NISSAN PATHFINDER	24
13089	96-97	LEXUS LX450	26
13089	91-97	TOYOTA LAND CRUISER	26
13091	92-00	MITSUBISHI MONTERO	48
13092	86-94	NISSAN D21	13
13093	11-22	CHRYSLER 300	52
13093	15-16	DODGE CHALLENGER	52
13093	12-16	DODGE CHARGER	52
13094	92-95	TOYOTA 4RUNNER	13
13095	87-95	NISSAN PATHFINDER	22
13096	94-94	HONDA PASSPORT	30
13096	91-97	ISUZU RODEO	30
13097	98-03	DODGE DURANGO	16
13098	96-99	ACURA SLX	20
13098	92-02	ISUZU TROOPER	20
13099	75-86	CHEVY C10	13
13099	88-98	CHEVY C1500	13
13099	75-86	CHEVY C20	13
13099	88-00	CHEVY C2500	13
13099	75-86	CHEVY C30	13
13099	88-00	CHEVY C3500	13
13099	91-00	CHEVY C3500HD	13
13099	75-86	CHEVY K10	13
13099	88-98	CHEVY K1500	13
13099	75-86	CHEVY K20	13
13099	88-00	CHEVY K2500	13
13099	75-86	CHEVY K30	13
13099	88-00	CHEVY K3500	13
13099	63-83	FORD F-100	13
13099	75-96	FORD F-150	13
13099	63-96	FORD F-250	13
13099	63-96	FORD F-350	13
13099	88-97	FORD F-SUPER DUTY	13
13099	75-78	GMC C15	13
13099	79-98	GMC C1500	13
13099	75-78	GMC C25	13
13099	79-00	GMC C2500	13
13099	75-78	GMC C35	13
13099	79-00	GMC C3500	13
13099	91-00	GMC C3500HD	13
13099	75-78	GMC K15	13
13099	79-98	GMC K1500	13
13099	75-78	GMC K25	13
13099	79-00	GMC K2500	13
13099	75-78	GMC K35	13
13099	79-00	GMC K3500	13
13102	10-13	MERCEDES-BENZ GL350	20
13102	07-13	MERCEDES-BENZ GL450	20
13102	08-13	MERCEDES-BENZ GL550	20
13102	11-11	MERCEDES-BENZ ML350	20
13103	07-09	MERCEDES-BENZ R320	20
13103	06-12	MERCEDES-BENZ R350	20
13103	06-07	MERCEDES-BENZ R500	20
13105	04-20	TOYOTA SIENNA	26
13106	91-03	FORD EXPLORER	18
13106	97-01	MERCURY MOUNTAINEER	18
13108	01-06	CHEVY SILVERADO 2500 HD	16
13108	07-07	CHEVY SILV. 2500 HD CLASSIC	16
13108	01-06	GMC SIERRA 2500 HD	16
13108	07-07	GMC SIERRA 2500 HD CLASSIC	16
13109	12-21	NISSAN NV1500	22
13109	12-21	NISSAN NV2500	22
13109	12-21	NISSAN NV3500	22
13110	09-20	FORD FLEX	32
13110	10-17	LINCOLN MKT	32
13112	06-10	FORD EXPLORER	24
13112	06-10	MERCURY MOUNTAINEER	24
13113	06-11	MITSUBISHI ENDEAVOR	22
13114	08-13	BMW X6	20

Part #	Years	Make / Model	Pallet Qty
13115	15-21	KIA SEDONA	30
13116	11-18	PORSCHE CAYENNE	26
13116	11-17	VOLKSWAGEN TOUAREG	26
13119	12-16	HONDA CR-V	26
13120	10-15	HYUNDAI TUCSON	30
13120	11-16	KIA SPORTAGE	30
13121	99-00	CADILLAC ESCALADE	26
13121	92-96	CHEVY BLAZER	26
13121	92-99	CHEVY C1500 SUBURBAN	26
13121	92-99	CHEVY C2500 SUBURBAN	26
13121	92-99	CHEVY K1500 SUBURBAN	26
13121	92-99	CHEVY K2500 SUBURBAN	26
13121	00-00	CHEVY SUBURBAN 1500	26
13121	00-00	CHEVY SUBURBAN 2500	26
13121	95-00	CHEVY TAHOE	26
13121	92-99	GMC C1500 SUBURBAN	26
13121	92-99	GMC C2500 SUBURBAN	26
13121	92-99	GMC K1500 SUBURBAN	26
13121	92-99	GMC K2500 SUBURBAN	26
13121	92-00	GMC YUKON	26
13125	97-02	FORD EXPEDITION	26
13125	98-02	LINCOLN NAVIGATOR	26
13126	14-20	INFINITI QX60	38
13126	13-16	NISSAN PATHFINDER	38
13128	12-19	LAND ROV. RGE ROVER EVOQUE	28
13130	13-18	ACURA RDX	24
13131	13-19	FORD ESCAPE	24
13132	83-04	CHEVY S10	28
13132	83-90	GMC S15	28
13132	91-04	GMC SONOMA	28
13133	09-17	VOLKSWAGEN TIGUAN	210
13135	16-17	SUBARU CROSSTREK	26
13135	13-15	SUBARU XV CROSSTREK	26
13136	09-17	AUDI Q5	25
13136	15-18	PORSCHE MACAN	25
13138	83-11	FORD RANGER	26
13138	94-09	MAZDA B2300	26
13138	94-07	MAZDA B3000	26
13138	94-09	MAZDA B4000	26
13140	13-15	BMW X1	13
13142	10-12	MERCEDES-BENZ GLK350	8
13143	10-15	LEXUS RX350	28
13143	10-15	LEXUS RX450H	28
13144	14-18	SUBARU FORESTER	20
13145	87-04	DODGE DAKOTA	24
13146	14-20	ACURA MDX	22
13146	16-22	HONDA PILOT	22
13147	09-13	SUBARU FORESTER	40
13149	06-18	TOYOTA RAV4	24
13152	13-18	HYUNDAI SANTA FE SPORT	26
13152	14-15	KIA SORENTO	26
13153	13-18	HYUNDAI SANTA FE	26
13153	19-19	HYUNDAI SANTA FE XL	26
13154	10-12	ACURA RDX	30
13155	13-15	MERCEDES-BENZ GLK250	9
13156	97-03	INFINITI QX4	26
13156	96-04	NISSAN PATHFINDER	26
13157	96-02	TOYOTA 4RUNNER	24
13158	10-14	SUBARU LEGACY	24
13160	84-01	JEEP CHEROKEE	24
13161	07-14	CHEVY TAHOE	24
13162	00-06	BMW X5	25
13163	14-20	MITSUBISHI OUTLANDER	20
13165	15-18	CHEVY CITY EXPRESS	28
13165	13-21	NISSAN NV200	28
13167	14-23	FORD TRANSIT CONNECT	24
13171	14-19	JEEP CHEROKEE	20
13172	14-18	JEEP CHEROKEE	24
13173	14-14	MERCEDES-BENZ GL350	20
13175	14-18	CHEVY SILVERADO 1500	20
13175	19-19	CHEVY SILVERADO 1500 LD	20
13175	14-18	GMC SIERRA 1500	20
13175	19-19	GMC SIERRA 1500 LIMITED	20
13176	15-22	CHEVY COLORADO	24
13176	15-22	GMC CANYON	24
13177	13-14	MERCEDES-BENZ GLK350	6
13178	15-19	CHEVYSILVERADO 2500 HD	20
13178	15-19	CHEVY SILVERADO 3500 HD	20

Part #	Years	Make / Model	Pallet Qty
13178	15-19	GMC SIERRA 2500 HD	20
13178	15-19	GMC SIERRA 3500 HD	20
13180	00-06	TOYOTA TUNDRA	22
13182	11-23	DODGE DURANGO	24
13182	12-21	JEEP GRAND CHEROKEE	24
13182	22-22	JEEP GRAND CHEROKEE WK	24
13183	00-04	NISSAN XTERRA	26
13184	00-06	TOYOTA TUNDRA	20
13186	13-19	FORD ESCAPE	24
13187	15-19	CHEVY SILVERADO 2500 HD	18
13187	15-19	CHEVY SILVERADO 3500 HD	18
13187	15-19	GMC SIERRA 2500 HD	18
13187	15-19	GMC SIERRA 3500 HD	18
13188	04-10	INFINITI QX56	24
13188	05-15	NISSAN ARMADA	24
13188	04-04	NISSAN PATHFINDER ARMADA	24
13190	14-16	MERCEDES-BENZ GL450	26
13190	14-16	MERCEDES-BENZ GL550	26
13190	17-19	MERCEDES-BENZ GLS450	26
13190	17-19	MERCEDES-BENZ GLS550	26
13193	15-23	FORD TRANSIT-150	30
13193	15-23	FORD TRANSIT-250	30
13193	15-23	FORD TRANSIT-350	30
13194	15-19	LINCOLN MKC	8
13195	19-20	HYUNDAI SANTA FE	20
13195	16-20	KIA SORENTO	20
13196	93-98	TOYOTA T100	20
13197	17-19	INFINITI QX30	22
13197	15-20	MERCEDES-BENZ GLA250	22
13197	15-19	MERCEDES-BENZ GLA45 AMG	22
13198	07-21	TOYOTA TUNDRA	24
13199	04-15	NISSAN TITAN	22
13200	14-19	TOYOTA HIGHLANDER	30
13201	09-20	DODGE JOURNEY	48
13203	15-22	CHEVY COLORADO	40
13203	15-22	GMC CANYON	40
13204	08-20	NISSAN ROGUE	26
13204	14-15	NISSAN ROGUE SELECT	26
13205	15-23	NISSAN MURANO	26
13206	14-19	SUBARU OUTBACK	24
13207	14-23	RAM PROMASTER 1500	24
13207	14-23	RAM PROMASTER 2500	24
13207	14-23	RAM PROMASTER 3500	24
13208	01-10	CHEVY SILVERADO 2500 HD	12
13208	07-07	CHEVY SILV. 2500 HD CLASSIC	12
13208	01-06	CHEVY SILVERADO 3500	12
13208	07-07	CHEVY SILVERADO 3500 CLAS.	12
13208	08-10	CHEVY SILVERADO 3500 HD	12
13208	01-10	GMC SIERRA 2500 HD	12
13208	07-07	GMC SIERRA 2500 HD CLASSIC	12
13208	01-06	GMC SIERRA 3500	12
13208	07-07	GMC SIERRA 3500 CLASSIC	12
13208	07-10	GMC SIERRA 3500 HD	12
13209	15-16	AUDI Q3	26
13210	01-10	CHEVY SILVERADO 2500 HD	18
13210	07-07	CHEVY SILV. 2500 HD CLASSIC	18
13210	01-06	CHEVY SILVERADO 3500	18
13210	07-07	CHEVY SILVERADO 3500 CLAS.	18
13210	08-10	CHEVY SILVERADO 3500 HD	18
13210	01-10	GMC SIERRA 2500 HD	18
13210	07-07	GMC SIERRA 2500 HD CLASSIC	18
13210	01-06	GMC SIERRA 3500	18
13210	07-07	GMC SIERRA 3500 CLASSIC	18
13210	07-10	GMC SIERRA 3500 HD	18
13211	01-10	CHEVY SILVERADO 2500 HD	18
13211	07-07	CHEVY SILV. 2500 HD CLASSIC	18
13211	01-06	CHEVY SILVERADO 3500	18
13211	07-07	CHEVY SILV. 3500 CLASSIC	18
13211	08-10	CHEVY SILVERADO 3500 HD	18
13211	01-10	GMC SIERRA 2500 HD	18
13211	07-07	GMC SIERRA 2500 HD CLASSIC	18
13211	01-06	GMC SIERRA 3500	18
13211	07-07	GMC SIERRA 3500 CLASSIC	18
13211	07-10	GMC SIERRA 3500 HD	18
13213	01-10	CHEVY SILVERADO 2500 HD	18
13213	07-07	CHEVY SILV. 2500 HD CLASSIC	18
13213	01-06	CHEVY SILVERADO 3500	18
13213	07-07	CHEVY SILV. 3500 CLASSIC	18

Part #	Years	Make / Model	Pallet Qty
13213	08-10	CHEVY SILVERADO 3500 HD	18
13213	01-10	GMC SIERRA 2500 HD	18
13213	07-07	GMC SIERRA 2500 HD CLASSIC	18
13213	01-06	GMC SIERRA 3500	18
13213	07-07	GMC SIERRA 3500 CLASSIC	18
13213	07-10	GMC SIERRA 3500 HD	18
13215	15-22	RAM PROMASTER CITY	20
13217	93-03	VOLKSWAGEN EUROVAN	13
13217	93-94	VOLKSWAGEN TRANSPORTER	13
13220	07-15	AUDI Q7	32
13220	04-10	PORSCHE CAYENNE	32
13220	04-10	VOLKSWAGEN TOUAREG	32
13222	98-02	HONDA PASSPORT	26
13222	02-03	ISUZU AXIOM	26
13222	98-04	ISUZU RODEO	26
13223	97-04	MITSUBISHI MONTERO SPORT	48
13229	05-10	DODGE DAKOTA	150
13229	06-09	MITSUBISHI RAIDER	150
13230	05-10	DODGE DAKOTA	20
13233	16-24	VOLVO XC90	20
13234	15-24	FORD EDGE	24
13235	98-02	HONDA PASSPORT	22
13235	89-00	ISUZU AMIGO	22
13235	98-04	ISUZU RODEO	22
13236	15-23	CHRYSLER 300	26
13236	11-23	DODGE CHALLENGER	26
13236	15-23	DODGE CHARGER	26
13238	15-18	AUDI Q3	28
13238	15-18	AUDI Q3 QUATTRO	28
13240	16-21	HYUNDAI TUCSON	40
13241	05-23	NISSAN FRONTIER	24
13241	09-12	SUZUKI EQUATOR	24
13243	14-22	LAND ROV. RNGE ROVER SPORT	12
13244	02-07	JEEP LIBERTY	24
13245	08-12	JEEP LIBERTY	26
13250	03-06	DODGE SPRINTER 2500	16
13250	03-06	DODGE SPRINTER 3500	16
13251	05-10	JEEP GRAND CHEROKEE	36
13252	04-12	CHEVY COLORADO	26
13252	04-12	GMC CANYON	26
13252	06-06	ISUZU I-280	26
13252	07-08	ISUZU I-290	26
13252	06-06	ISUZU I-350	26
13252	07-08	ISUZU I-370	26
13264	16-23	TOYOTA TACOMA	36
13265	03-06	DODGE SPRINTER 2500	18
13265	03-06	DODGE SPRINTER 3500	18
13266	11-18	VOLVO S60	24
13266	15-18	VOLVO V60	24
13266	15-18	VOLVO V60 CROSS COUNTRY	24
13266	08-10	VOLVO V70	24
13266	09-16	VOLVO XC70	24
13268	10-17	VOLVO XC60	22
13269	15-23	JEEP RENEGADE	24
13270	06-10	HUMMER H3	32
13271	16-21	FIAT 500X	24
13272	16-19	LEXUS RX350	24
13273	18-21	MITSUBISHI ECLIPSE CROSS	24
13275	07-09	DODGE SPRINTER 2500	24
13275	07-09	DODGE SPRINTER 3500	24
13275	07-16	FREIGHTLINER SPRINTER 3500	24
13275	10-11	MERCEDES-BENZ SPRINTER 3500	24
13276	16-23	MERCEDES-BENZ METRIS	26
13277	17-23	AUDI Q7	24
13280	87-04	DODGE DAKOTA	24
13281	17-22	KIA SPORTAGE	32
13282	16-20	LEXUS RX450H	24
13284	16-22	MAZDA CX-9	24
13285	17-23	CADILLAC XT5	24
13287	12-18	FORD RANGER	24
13290	16-20	MERCEDES-BENZ GLC300	24
13290	17-20	MERCEDES-BENZ GLC43 AMG	24
13291	17-24	JAGUAR F-PACE	24
13292	16-18	BUICK ENVISION	24
13293	17-23	GMC ACADIA	24
13294	16-18	MERCEDES-BENZ GLE350	24
13294	17-19	MERCEDES-BENZ GLE43 AMG	24
13295	14-23	RAM PROMASTER 1500	40

Part #	Years	Make / Model	Pallet Qty
13295	14-23	RAM PROMASTER 2500	40
13295	14-23	RAM PROMASTER 3500	40
13296	07-09	CHRYSLER ASPEN	28
13296	07-09	DODGE DURANGO	28
13297	04-06	DODGE DURANGO	24
13300	95-04	CHEVY BLAZER	48
13300	95-01	GMC JIMMY	48
13300	96-04	OLDSMOBILE BRAVADA	48
13301	07-18	CHEVY SILVERADO 1500	18
13301	19-19	CHEVY SILVERADO 1500 LD	18
13301	07-18	GMC SIERRA 1500	18
13301	19-19	GMC SIERRA 1500 LIMITED	18
13303	16-22	BMW X1	28
13304	17-24	NISSAN TITAN	20
13305	17-21	VOLVO S90	24
13309	17-20	NISSAN PATHFINDER	24
13310	68-74	DODGE D100 PICKUP	26
13310	77-93	DODGE D150	26
13310	68-74	DODGE D200 PICKUP	26
13310	81-93	DODGE D250	26
13310	68-74	DODGE D300 PICKUP	26
13310	81-93	DODGE D350	26
13310	80-96	FORD BRONCO	26
13310	73-83	FORD F-100	26
13310	75-97	FORD F-150	26
13310	73-97	FORD F-250	26
13310	73-97	FORD F-350	26
13314	97-01	HONDA CR-V	20
13315	13-23	MAZDA CX-5	24
13316	11-17	BMW X3	32
13316	15-18	BMW X4	32
13317	16-23	NISSAN TITAN XD	30
13318	02-08	MERCEDES-BENZ G500	20
13320	02-02	DODGE RAM 1500	20
13322	99-13	CHEVY SILVERADO 1500	26
13322	07-07	CHEVY SILV. 1500 CLASSIC	26
13322	01-06	CHEVY SILVERADO 1500 HD	26
13322	07-07	CHEVY SILV. 1500 HD CLASSIC	26
13322	99-04	CHEVY SILVERADO 2500	26
13322	99-13	GMC SIERRA 1500	26
13322	07-07	GMC SIERRA 1500 CLASSIC	26
13322	01-06	GMC SIERRA 1500 HD	26
13322	07-07	GMC SIERRA 1500 HD CLASSIC	26
13322	99-04	GMC SIERRA 2500	26
13323	05-15	TOYOTA TACOMA	24
13326	02-02	DODGE RAM 1500	40
13328	01-06	ACURA MDX	52
13328	03-08	HONDA PILOT	52
13329	17-22	KIA NIRO	26
13332	99-06	CHEVY SILVERADO 1500	22
13332	07-07	CHEVY SILV. 1500 CLASSIC	22
13332	01-06	CHEVY SILVERADO 1500 HD	22
13332	07-07	CHEVY SILV. 1500 HD CLASSIC	22
13332	99-04	CHEVY SILVERADO 2500	22
13332	99-06	GMC SIERRA 1500	22
13332	07-07	GMC SIERRA 1500 CLASSIC	22
13332	01-06	GMC SIERRA 1500 HD	22
13332	07-07	GMC SIERRA 1500 HD CLASSIC	22
13332	99-04	GMC SIERRA 2500	22
13333	03-10	DODGE RAM 1500	85
13333	03-10	DODGE RAM 2500	85
13333	03-10	DODGE RAM 3500	85
13333	11-18	RAM 1500	85
13333	19-23	RAM 1500 CLASSIC	85
13333	11-13	RAM 2500	85
13333	11-13	RAM 3500	85
13334	07-12	DODGE NITRO	22
13336	05-07	BUICK TERRAZA	20
13336	05-09	CHEVY UPLANDER	20
13336	05-09	PONTIAC MONTANA	20
13336	05-07	SATURN RELAY	20
13337	15-17	LEXUS NX200T	24
13337	18-21	LEXUS NX300	24
13337	15-21	LEXUS NX300H	24
13339	99-12	CHEVY SILVERADO 1500	16
13339	07-07	CHEVY SILV. 1500 CLASSIC	16
13339	01-06	CHEVY SILVERADO 1500 HD	16
13339	07-07	CHEVY SILV. 1500 HD CLASSIC	16

Part #	Years	Make / Model	Pallet Qty
13339	99-04	CHEVY SILVERADO 2500	16
13339	99-12	GMC SIERRA 1500	16
13339	07-07	GMC SIERRA 1500 CLASSIC	16
13339	01-06	GMC SIERRA 1500 HD	16
13339	07-07	GMC SIERRA 1500 HD CLASSIC	16
13339	99-04	GMC SIERRA 2500	16
13340	02-05	KIA SEDONA	28
13342	07-08	MERCEDES-BENZ ML320	24
13342	06-11	MERCEDES-BENZ ML350	24
13342	06-07	MERCEDES-BENZ ML500	24
13342	08-09	MERCEDES-BENZ ML550	24
13343	11-20	TOYOTA SIENNA	44
13344	05-07	BUICK TERRAZA	26
13344	05-09	CHEVY UPLANDER	26
13344	97-05	CHEVY VENTURE	26
13344	97-04	OLDSMOBILE SILHOUETTE	26
13344	99-09	PONTIAC MONTANA	26
13344	97-98	PONTIAC TRANS SPORT	26
13345	07-08	HYUNDAI ENTOURAGE	48
13345	06-14	KIA SEDONA	48
13349	07-10	KIA SEDONA	24
13352	04-05	FORD F-150	8
13354	07-13	ACURA MDX	24
13355	97-03	FORD F-150	16
13355	04-04	FORD F-150 HERITAGE	16
13355	97-99	FORD F-250	16
13355	99-15	FORD F-250 SUPER DUTY	16
13355	99-15	FORD F-350 SUPER DUTY	16
13355	08-15	FORD F-450 SUPER DUTY	16
13356	09-16	TOYOTA VENZA	24
13357	04-05	FORD F-150	8
13358	07-09	DODGE SPRINTER 2500	18
13358	07-09	DODGE SPRINTER 3500	18
13358	07-21	FREIGHTLINER SPRINTER 2500	18
13358	07-21	FREIGHTLINER SPRINTER 3500	18
13358	10-24	MERCEDES-BENZ SPRINTER 2500	18
13358	10-24	MERCEDES-BENZ SPRINTER 3500	18
13359	97-03	FORD F-150	16
13359	04-04	FORD F-150 HERITAGE	16
13359	97-99	FORD F-250	16
13359	99-15	FORD F-250 SUPER DUTY	16
13359	99-15	FORD F-350 SUPER DUTY	16
13359	08-15	FORD F-450 SUPER DUTY	16
13360	06-08	FORD F-150	22
13360	06-08	LINCOLN MARK LT	22
13361	02-08	DODGE RAM 1500	12
13361	03-10	DODGE RAM 2500	12
13361	03-10	DODGE RAM 3500	12
13361	11-24	RAM 2500	12
13361	11-24	RAM 3500	12
13362	96-07	CHRYSLER TOWN & COUNTRY	24
13362	00-03	CHRYSLER VOYAGER	24
13362	96-07	DODGE CARAVAN	24
13362	96-07	DODGE GRAND CARAVAN	24
13362	96-00	PLYMOUTH VOYAGER	24
13363	17-23	JEEP COMPASS	24
13364	08-16	CHRYSLER TOWN & COUNTRY	24
13364	08-20	DODGE GRAND CARAVAN	24
13364	12-15	RAM C/V	24
13364	09-14	VOLKSWAGEN ROUTAN	24
13365	06-08	FORD F-150	26
13365	06-08	LINCOLN MARK LT	26
13366	18-20	VOLKSWAGEN ATLAS	24
13367	07-14	TOYOTA FJ CRUISER	26
13368	09-14	FORD F-150	26
13370	18-24	HONDA ODYSSEY	52
13371	09-14	FORD F-150	26
13374	09-10	DODGE RAM 1500	12
13374	11-18	RAM 1500	12
13374	19-23	RAM 1500 CLASSIC	12
13375	07-10	DODGE SPRINTER 3500	12
13375	07-20	FREIGHTLINER SPRINTER 3500	12
13375	10-19	MERCEDES-BENZ SPRINTER 3500	12
13377	17-23	NISSAN QASHQAI	24
13377	17-22	NISSAN ROGUE SPORT	24
13379	10-19	FORD TAURUS	24
13381	18-23	VOLKSWAGEN TIGUAN	24
13382	18-24	SUBARU CROSSTREK	24

Part #	Years	Make / Model	Pallet Qty
13383	17-23	CHRYSLER PACIFICA	24
13383	20-22	CHRYSLER VOYAGER	24
13385	06-14	HONDA RIDGELINE	30
13386	11-19	FORD EXPLORER	52
13386	13-19	FORD POLICE INTERCEP. UTILITY	52
13387	18-24	BMW X3	24
13388	07-09	DODGE SPRINTER 2500	20
13388	07-09	DODGE SPRINTER 3500	20
13388	07-21	FREIGHTLINER SPRINTER 2500	20
13388	07-21	FREIGHTLINER SPRINTER 3500	20
13388	19-20	FREIGHTLINER SPRINTER 1500	20
13388	10-24	MERCEDES-BENZ SPRINTER 2500	20
13388	10-24	MERCEDES-BENZ SPRINTER 3500	20
13388	19-23	MERCEDES-BENZ SPRINTER 1500	20
13389	04-07	CHRYSLER TOWN & COUNTRY	34
13389	04-07	DODGE CARAVAN	34
13389	04-07	DODGE GRAND CARAVAN	34
13390	15-19	SUBARU LEGACY	24
13390	10-13	SUBARU OUTBACK	24
13391	18-24	ALFA ROMEO STELVIO	24
13392	07-24	JEEP WRANGLER	40
13393	19-24	CHEVY SILVERADO 1500	24
13393	22-22	CHEVY SILVERADO 1500 LTD	24
13393	19-24	GMC SIERRA 1500	24
13393	22-22	GMC SIERRA 1500 LIMITED	24
13394	18-20	LEXUS RX350L	24
13394	14-19	TOYOTA HIGHLANDER	24
13395	19-23	JEEP CHEROKEE	24
13396	15-19	LAND ROVER DISCOVERY SPORT	24
13397	17-24	HONDA CR-V	24
13398	18-22	MITSUBISHI OUTLANDER PHEV	24
13400	19-23	SUBARU ASCENT	24
13401	73-91	CHEVY BLAZER	18
13401	75-86	CHEVY K5 BLAZER	18
13401	73-91	GMC JIMMY	18
13402	02-02	CADILLAC ESCALADE	44
13402	02-02	CHEVY AVALANCHE 1500	44
13402	02-02	CHEVY AVALANCHE 2500	44
13402	00-02	CHEVY SUBURBAN 1500	44
13402	00-02	CHEVY SUBURBAN 2500	44
13402	00-02	CHEVY TAHOE	44
13402	00-02	GMC YUKON	44
13405	19-20	BUICK ENVISION	24
13406	13-18	TOYOTA RAV4	20
13407	01-05	FORD EXPLORER SPORT TRAC	48
13408	97-06	JEEP WRANGLER	52
13409	19-23	SUBARU FORESTER	24
13410	10-19	SUBARU OUTBACK	24
13411	16-18	MERCEDES-BENZ GLE350	20
13411	17-19	MERCEDES-BENZ GLE43 AMG	20
13411	12-15	MERCEDES-BENZ ML350	20
13412	78-83	JEEP CJ5	6
13412	78-86	JEEP CJ7	6
13414	06-10	JEEP COMMANDER	50
13415	19-24	CADILLAC XT4	24
13416	19-23	TOYOTA RAV4	24
13417	19-23	FORD RANGER	24
13418	19-23	CHEVY BLAZER	24
13419	19-24	RAM 1500	150
13420	20-24	KIA TELLURIDE	24
13421	19-23	HONDA PASSPORT	24
13422	03-06	CADILLAC ESCALADE	26
13422	03-06	CADILLAC ESCALADE ESV	26
13422	03-06	CADILLAC ESCALADE EXT	26
13422	03-06	CHEVY AVALANCHE 1500	26
13422	03-06	CHEVY AVALANCHE 2500	26
13422	03-06	CHEVY SUBURBAN 1500	26
13422	03-06	CHEVY SUBURBAN 2500	26
13422	03-06	CHEVY TAHOE	26
13422	03-06	GMC YUKON	26
13423	19-23	ACURA RDX	24
13424	08-17	BUICK ENCLAVE	48
13424	09-17	CHEVY TRAVERSE	48
13424	07-16	GMC ACADIA	48
13424	17-17	GMC ACADIA LIMITED	48
13424	07-10	SATURN OUTLOOK	48
13427	20-23	HYUNDAI PALISADE	24
13429	99-03	LEXUS RX300	26

Part #	Years	Make / Model	Pallet Qty
13429	01-03	TOYOTA HIGHLANDER	26
13430	97-06	JEEP WRANGLER	52
13432	07-18	JEEP WRANGLER	90
13433	18-24	BUICK ENCLAVE	24
13433	18-23	CHEVY TRAVERSE	24
13434	20-23	JEEP GLADIATOR	150
13435	14-18	SUBARU FORESTER	24
13438	20-23	FORD EXPLORER	20
13438	20-23	LINCOLN AVIATOR	20
13439	18-24	CHEVY EQUINOX	24
13439	18-24	GMC TERRAIN	24
13440	01-07	TOYOTA SEQUOIA	24
13442	08-11	TOYOTA SEQUOIA	48
13443	98-07	LEXUS LX470	20
13443	98-07	TOYOTA LAND CRUISER	20
13445	03-09	LEXUS GX470	26
13445	03-09	TOYOTA 4RUNNER	26
13447	20-24	CHEVY SILVERADO 2500 HD	12
13447	20-24	CHEVY SILVERADO 3500 HD	12
13447	20-24	GMC SIERRA 2500 HD	12
13447	20-24	GMC SIERRA 3500 HD	12
13448	19-23	SUBARU ASCENT	24
13449	17-23	TESLA 3	24
13451	19-24	BMW X5	28
13452	15-24	FORD EDGE	24
13452	16-18	LINCOLN MKX	24
13452	19-22	LINCOLN NAUTILUS	24
13453	20-23	TOYOTA HIGHLANDER	24
13454	20-23	FORD ESCAPE	24
13454	20-23	LINCOLN CORSAIR	24
13455	98-04	LAND ROVER DISCOVERY	18
13456	05-09	LAND ROVER LR3	24
13456	10-16	LAND ROVER LR4	24
13456	06-13	LAND ROV. RNGE ROVER SPORT	24
13457	16-19	TOYOTA HILUX	24
13458	20-24	VOLKS. ATLAS CROSS SPORT	20
13459	19-23	SUBARU FORESTER	20
13460	20-23	TOYOTA HIGHLANDER	24
13462	17-22	CHRYSLER PACIFICA	20
13464	21-24	GENESIS GV80	20
13465	05-10	CHRYSLER 300	60
13465	08-10	DODGE CHALLENGER	60
13465	06-10	DODGE CHARGER	60
13465	05-08	DODGE MAGNUM	60
13466	17-23	CHRYSLER PACIFICA	0
13467	16-20	VOLVO XC90	24
13468	21-23	TOYOTA VENZA	24
13469	02-07	BUICK RENDEZVOUS	24
13469	01-05	PONTIAC AZTEK	24
13470	21-23	TOYOTA SIENNA	26
13471	21-23	NISSAN ROGUE	24
13472	22-24	ACURA MDX	20
13472	23-24	HONDA PILOT	20
13473	21-23	HYUNDAI SANTA FE	20
13473	21-23	KIA SORENTO	20
13474	21-24	FORD BRONCO SPORT	24
13475	15-23	FORD F-150	26
13477	21-23	MERCEDES-BENZ GLC300	28
13478	22-24	KIA CARNIVAL	24
13479	21-22	BUICK ENVISION	24
13480	21-23	FORD MUSTANG MACH-E	24
13481	21-23	VOLKSWAGEN ATLAS	24
13482	20-24	CADILLAC XT6	0
13484	21-24	VOLVO XC60	24
13485	22-24	HYUNDAI TUCSON	24
13485	23-24	KIA SPORTAGE	24
13486	22-24	HYUNDAI SANTA CRUZ	16
13487	22-23	MITSUBISHI OUTLANDER	28
13489	21-23	VOLKSWAGEN ID.4	0
13490	21-23	MERCEDES-BENZ GLA250	24
13491	21-23	JEEP GRAND CHEROKEE L	30
13492	21-23	VOLKSWAGEN ID.4	0
13493	21-24	FORD BRONCO	90
13494	20-24	SUBARU LEGACY	26
13494	20-24	SUBARU OUTBACK	26
13495	22-23	CHEVY BOLT EUV	24
13496	22-23	VOLKSWAGEN TAOS	24
13497	22-22	KIA NIRO	28

Part #	Years	Make / Model	Pallet Qty
13497	22-22	KIA NIRO EV	28
13498	22-24	LEXUS NX350	24
13498	22-24	LEXUS NX350H	24
13498	22-24	LEXUS NX450H+	24
13498	22-24	LEXUS NX250	24
13499	18-23	AUDI Q5	26
13499	18-23	AUDI SQ5	26
13503	20-23	JEEP GLADIATOR	24
13504	22-23	FORD MAVERICK	24
13505	01-06	HYUNDAI SANTA FE	48
13506	01-04	FORD ESCAPE	24
13506	01-04	MAZDA TRIBUTE	24
13507	22-23	JEEP GRAND CHEROKEE	28
13510	23-24	MAZDA CX-50	28
13511	98-03	TOYOTA SIENNA	48
13512	22-24	NISSAN PATHFINDER	24
13513	03-09	KIA SORENTO	24
13514	05-15	NISSAN XTERRA	26
13515	16-22	LEXUS RX350	24
13515	16-21	LEXUS RX450H	24
13517	99-04	CHEVY TRACKER	44
13517	99-06	SUZUKI GRAND VITARA	44
13517	99-04	SUZUKI VITARA	44
13517	02-06	SUZUKI XL-7	44
13518	07-09	SUZUKI GRAND VITARA	50
13518	07-09	SUZUKI XL-7	50
13519	24-24	TOYOTA GRAND HIGHLANDER	24
13520	22-23	HYUNDAI IONIQ 5	20
13522	21-23	BUICK ENVISION	0
13523	18-24	HONDA ODYSSEY	24
13524	96-05	TOYOTA RAV4	48
13525	22-23	JEEP GRAND CHEROKEE	24
13525	21-23	JEEP GRAND CHEROKEE L	24
13526	05-09	HYUNDAI TUCSON	40
13526	05-10	KIA SPORTAGE	40
13529	04-08	CHRYSLER PACIFICA	24
13530	04-06	LEXUS RX330	24
13530	07-09	LEXUS RX350	24
13530	06-08	LEXUS RX400H	24
13530	04-07	TOYOTA HIGHLANDER	24
13531	22-23	KIA NIRO	24
13531	22-23	KIA NIRO EV	24
13532	22-24	BMW IX	24
13534	08-13	TOYOTA HIGHLANDER	24
13535	02-06	HONDA CR-V	40
13536	07-09	ACURA RDX	28
13537	95-02	KIA SPORTAGE	24
13538	07-09	HYUNDAI SANTA FE	48
13540	91-01	FORD EXPLORER	44
13540	91-94	MAZDA NAVAJO	44
13540	97-01	MERCURY MOUNTAINEER	44
13542	05-07	FORD FIVE HUNDRED	60
13542	05-07	FORD FREESTYLE	60
13542	08-09	FORD TAURUS	60
13542	05-07	MERCURY MONTEGO	60
13542	08-09	MERCURY SABLE	60
13545	07-12	HYUNDAI VERACRUZ	44
13546	23-23	LEXUS RZ450E	24
13548	07-10	JEEP COMPASS	44
13548	07-10	JEEP PATRIOT	44
13550	02-05	FORD EXPLORER	24
13550	03-05	LINCOLN AVIATOR	24
13550	02-05	MERCURY MOUNTAINEER	24
13551	09-20	FORD FLEX	24
13553	23-24	DODGE HORNET	24
13554	09-12	INFINITI FX35	20
13554	13-13	INFINITI FX37	20
13554	09-13	INFINITI FX50	20
13554	14-17	INFINITI QX70	20
13555	07-11	HONDA CR-V	30
13558	03-08	INFINITI FX35	28
13558	03-08	INFINITI FX45	28
13559	03-14	VOLVO XC90	24
13563	04-09	NISSAN QUEST	28
13564	20-24	JEEP WRANGLER	36
13566	23-23	MITSUBISHI OUTLANDER PHEV	24
13568	24-24	MAZDA CX-90	24
13569	04-05	MITSUBISHI ENDEAVOR	30

Part #	Years	Make / Model	Pallet Qty
13570	20-24	SUBARU LEGACY	8
13570	20-24	SUBARU OUTBACK	8
13571	03-07	NISSAN MURANO	28
13572	99-02	MERCURY VILLAGER	26
13572	99-02	NISSAN QUEST	26
13573	04-10	BMW X3	44
13574	03-11	HONDA ELEMENT	30
13575	07-15	MAZDA CX-9	26
13577	09-14	NISSAN MURANO	28
13579	23-23	LEXUS RX350	24
13579	23-23	LEXUS RX350H	24
13579	23-23	LEXUS RX500H	24
13580	71-80	INTERNATIONAL SCOUT II	22
13581	07-13	MITSUBISHI OUTLANDER	32
13583	19-23	LEXUS UX250H	24
13585	24-24	CHEVY TRAX	24
13587	04-07	FORD FREESTAR	36
13587	04-07	MERCURY MONTEREY	36
13590	99-03	DODGE RAM 1500 VAN	20
13590	99-03	DODGE RAM 2500 VAN	20
13590	99-03	DODGE RAM 3500 VAN	20
13591	05-17	CHEVY EQUINOX	48
13591	10-17	GMC TERRAIN	48
13591	06-09	PONTIAC TORRENT	48
13591	02-07	SATURN VUE	48
13593	07-12	MAZDA CX-7	24
13594	12-15	CHEVY CAPTIVA SPORT	24
13594	08-10	SATURN VUE	24
13650	05-12	FORD ESCAPE	20
13650	05-11	MAZDA TRIBUTE	20
13650	05-11	MERCURY MARINER	20
13651	05-11	FORD ESCAPE	20
13651	05-11	MAZDA TRIBUTE	20
13651	05-11	MERCURY MARINER	20
13657	87-95	JEEP WRANGLER	40
13707	87-91	FORD COUNTRY SQUIRE	52
13707	92-11	FORD CROWN VICTORIA	52
13707	80-83	LINCOLN MARK VI	52
13707	81-11	LINCOLN TOWN CAR	52
13707	79-09	MERCURY GRAND MARQUIS	52
13707	03-04	MERCURY MARAUDER	52
13800	01-06	MITSUBISHI MONTERO	20
13831	00-04	NISSAN FRONTIER	26
13841	00-04	NISSAN FRONTIER	26
13842	03-04	NISSAN FRONTIER	20
13920	82-04	CHEVY S10	40
13920	82-90	GMC S15	40
13920	91-04	GMC SONOMA	40
13932	99-06	CHEVY SILVERADO 1500	32
13932	07-07	CHEVY SILVERADO 1500 CLAS.	32
13932	99-06	GMC SIERRA 1500	32
13932	07-07	GMC SIERRA 1500 CLASSIC	32
13942	88-99	CHEVY C1500	24
13942	88-99	CHEVY K1500	24
13942	88-99	GMC C1500	24
13942	88-99	GMC K1500	24
14000	12-21	NISSAN NV1500	20
14000	12-21	NISSAN NV2500	20
14000	12-21	NISSAN NV3500	20
14001	75-89	DODGE D100	26
14001	68-74	DODGE D100 PICKUP	26
14001	77-93	DODGE D150	26
14001	68-74	DODGE D200 PICKUP	26
14001	81-93	DODGE D250	26
14001	68-74	DODGE D300 PICKUP	26
14001	81-93	DODGE D350	26
14001	94-01	DODGE RAM 1500	26
14001	94-02	DODGE RAM 2500	26
14001	94-02	DODGE RAM 3500	26
14001	78-96	FORD BRONCO	26
14001	73-83	FORD F-100	26
14001	75-96	FORD F-150	26
14001	73-97	FORD F-250	26
14001	97-97	FORD F-250 HD	26
14001	73-97	FORD F-350	26
14002	09-14	FORD F-150	24
14005	20-24	CHEVY SILVERADO 2500 HD	12
14005	20-24	CHEVY SILVERADO 3500 HD	12

Part #	Years	Make / Model	Pallet Qty
14005	20-24	GMC SIERRA 2500 HD	12
14005	20-24	GMC SIERRA 3500 HD	12
14006	14-18	CHEVY SILVERADO 1500	18
14006	19-19	CHEVY SILVERADO 1500 LD	18
14006	14-18	GMC SIERRA 1500	18
14006	19-19	GMC SIERRA 1500 LIMITED	18
14008	01-06	CHEVY SILVERADO 2500 HD	18
14008	07-07	CHEVY SILV. 2500 HD CLASSIC	18
14008	01-06	CHEVY SILVERADO 3500	18
14008	07-07	CHEVY SILV. 3500 CLASSIC	18
14008	01-06	GMC SIERRA 2500 HD	18
14008	07-07	GMC SIERRA 2500 HD CLASSIC	18
14008	01-06	GMC SIERRA 3500	18
14008	07-07	GMC SIERRA 3500 CLASSIC	18
14009	15-19	CHEVY SILVERADO 2500 HD	16
14009	15-19	CHEVY SILVERADO 3500 HD	16
14009	15-19	GMC SIERRA 2500 HD	16
14009	15-19	GMC SIERRA 3500 HD	16
14010	15-19	CHEVY SILVERADO 2500 HD	18
14010	15-19	CHEVY SILVERADO 3500 HD	18
14010	15-19	GMC SIERRA 2500 HD	18
14010	15-19	GMC SIERRA 3500 HD	18
14011	00-05	FORD EXCURSION	16
14012	15-23	FORD TRANSIT-150	24
14012	15-23	FORD TRANSIT-250	24
14012	15-23	FORD TRANSIT-350	24
14017	15-23	FORD F-150	22
14018	20-23	FORD F-350 SUPER DUTY	16
14019	19-24	CHEVY SILVERADO 1500	24
14019	22-22	CHEVY SILVERADO 1500 LTD	24
14019	19-24	GMC SIERRA 1500	24
14019	22-22	GMC SIERRA 1500 LIMITED	24
14020	02-02	DODGE RAM 1500	20
14021	15-23	FORD F-150	24
14022	22-23	TOYOTA TUNDRA	24
14029	99-00	CADILLAC ESCALADE	24
14029	92-94	CHEVY BLAZER	24
14029	92-99	CHEVY C1500 SUBURBAN	24
14029	92-99	CHEVY C2500 SUBURBAN	24
14029	92-99	CHEVY K1500 SUBURBAN	24
14029	92-99	CHEVY K2500 SUBURBAN	24
14029	95-00	CHEVY TAHOE	24
14029	92-99	GMC YUKON	24
14048	99-20	FORD F-350 SUPER DUTY	14
14048	99-23	FORD F-450 SUPER DUTY	14
14048	99-23	FORD F-550 SUPER DUTY	14
14048	00-23	FORD F-650	14
14053	03-06	FORD E-150	26
14053	75-02	FORD E-150 ECONOLINE	26
14053	03-06	FORD E-250	26
14053	75-02	FORD E-250 ECONOLINE	26
14053	75-98	FORD E-350 ECONOLINE	26
14053	99-06	FORD E-350 SUPER DUTY	26
14055	03-14	FORD E-150	24
14055	00-02	FORD E-150 ECONOLINE	24
14055	03-14	FORD E-250	24
14055	00-02	FORD E-250 ECONOLINE	24
14055	00-14	FORD E-350 SUPER DUTY	24
14061	11-14	CHEVY SILVERADO 2500 HD	14
14061	11-14	CHEVY SILVERADO 3500 HD	14
14061	11-14	GMC SIERRA 2500 HD	14
14061	11-14	GMC SIERRA 3500 HD	14
14062	11-14	CHEVY SILVERADO 2500 HD	16
14062	11-14	CHEVY SILVERADO 3500 HD	16
14062	11-14	GMC SIERRA 2500 HD	16
14062	11-14	GMC SIERRA 3500 HD	16
14070	07-10	DODGE RAM 3500	16
14070	08-10	DODGE RAM 4500	16
14070	08-10	DODGE RAM 5500	16
14070	11-24	RAM 3500	16
14070	11-24	RAM 4500	16
14070	11-24	RAM 5500	16
14080	02-02	CADILLAC ESCALADE	48
14080	02-02	CHEVY AVALANCHE 1500	48
14080	02-02	CHEVY AVALANCHE 2500	48
14080	00-02	CHEVY SUBURBAN 1500	48
14080	00-02	CHEVY SUBURBAN 2500	48
14080	00-02	CHEVY TAHOE	48

Part #	Years	Make / Model	Pallet Qty
14080	00-02	GMC YUKON	48
14081	88-99	CHEVY C1500	18
14081	88-00	CHEVY C2500	18
14081	88-00	CHEVY C3500	18
14081	88-99	CHEVY K1500	18
14081	88-00	CHEVY K2500	18
14081	88-00	CHEVY K3500	18
14081	88-99	GMC C1500	18
14081	88-00	GMC C2500	18
14081	88-00	GMC C3500	18
14081	88-99	GMC K1500	18
14081	88-00	GMC K2500	18
14081	88-00	GMC K3500	18
14082	75-86	CHEVY C10	24
14082	75-86	CHEVY C20	24
14082	88-00	CHEVY C2500	24
14082	75-86	CHEVY C30	24
14082	88-00	CHEVY C3500	24
14082	91-02	CHEVY C3500HD	24
14082	75-86	CHEVY K10	24
14082	75-86	CHEVY K20	24
14082	88-00	CHEVY K2500	24
14082	75-86	CHEVY K30	24
14082	88-00	CHEVY K3500	24
14082	99-99	CHEVY SILVERADO 2500	24
14082	01-06	CHEVY SILVERADO 3500	24
14082	07-07	CHEVY SILV. 3500 CLASSIC	24
14082	75-79	FORD F-250	24
14082	75-97	FORD F-350	24
14082	88-97	FORD F-SUPER DUTY	24
14082	75-78	GMC C15	24
14082	79-86	GMC C1500	24
14082	75-78	GMC C25	24
14082	79-00	GMC C2500	24
14082	75-78	GMC C35	24
14082	79-00	GMC C3500	24
14082	91-02	GMC C3500HD	24
14082	75-78	GMC K15	24
14082	79-86	GMC K1500	24
14082	75-78	GMC K25	24
14082	79-00	GMC K2500	24
14082	75-78	GMC K35	24
14082	79-00	GMC K3500	24
14082	99-99	GMC SIERRA 2500	24
14082	01-06	GMC SIERRA 3500	24
14082	07-07	GMC SIERRA 3500 CLASSIC	24
14090	96-14	CHEVY EXPRESS 1500	26
14090	96-24	CHEVY EXPRESS 2500	26
14090	96-24	CHEVY EXPRESS 3500	26
14090	96-14	GMC SAVANA 1500	26
14090	96-24	GMC SAVANA 2500	26
14090	96-24	GMC SAVANA 3500	26
14108	01-06	CHEVY SILVERADO 2500 HD	20
14108	07-07	CHEVY SILV. 2500 HD CLASSIC	20
14108	01-06	GMC SIERRA 2500 HD	20
14108	07-07	GMC SIERRA 2500 HD CLASSIC	20
14211	01-10	CHEVY SILVERADO 2500 HD	14
14211	07-07	CHEVY SILV. 2500 HD CLASSIC	14
14211	01-06	CHEVY SILVERADO 3500	14
14211	07-07	CHEVY SILVERADO 3500 CLAS.	14
14211	08-10	CHEVY SILVERADO 3500 HD	14
14211	01-10	GMC SIERRA 2500 HD	14
14211	07-07	GMC SIERRA 2500 HD CLASSIC	14
14211	01-06	GMC SIERRA 3500	14
14211	07-07	GMC SIERRA 3500 CLASSIC	14
14211	07-10	GMC SIERRA 3500 HD	14
14250	03-06	DODGE SPRINTER 2500	16
14250	03-06	DODGE SPRINTER 3500	16
14301	07-18	CHEVY SILVERADO 1500	18
14301	19-19	CHEVY SILVERADO 1500 LD	18
14301	07-18	GMC SIERRA 1500	18
14301	19-19	GMC SIERRA 1500 LIMITED	18
14332	99-06	CHEVY SILVERADO 1500	22
14332	07-07	CHEVY SILV. 1500 CLASSIC	22
14332	01-06	CHEVY SILVERADO 1500 HD	22
14332	07-07	CHEVY SILV. 1500 HD CLASSIC	22
14332	99-04	CHEVY SILVERADO 2500	22
14332	99-06	GMC SIERRA 1500	22

Part #	Years	Make / Model	Pallet Qty
14332	07-07	GMC SIERRA 1500 CLASSIC	22
14332	01-06	GMC SIERRA 1500 HD	22
14332	07-07	GMC SIERRA 1500 HD CLASSIC	22
14332	99-04	GMC SIERRA 2500	22
14355	97-03	FORD F-150	16
14355	04-04	FORD F-150 HERITAGE	16
14355	97-99	FORD F-250	16
14355	99-15	FORD F-250 SUPER DUTY	16
14355	99-16	FORD F-350 SUPER DUTY	16
14355	08-16	FORD F-450 SUPER DUTY	16
14357	04-05	FORD F-150	8
14360	06-08	FORD F-150	24
14360	06-08	LINCOLN MARK LT	24
14361	02-08	DODGE RAM 1500	14
14361	03-10	DODGE RAM 2500	14
14361	03-10	DODGE RAM 3500	14
14361	11-24	RAM 2500	14
14361	11-24	RAM 3500	14
14374	09-10	DODGE RAM 1500	12
14374	11-18	RAM 1500	12
14374	19-23	RAM 1500 CLASSIC	12
15005	19-24	RAM 1500	10
15007	20-24	CHEVY SILVERADO 2500 HD	8
15007	20-24	CHEVY SILVERADO 3500 HD	8
15007	20-24	GMC SIERRA 2500 HD	8
15007	20-24	GMC SIERRA 3500 HD	8
15010	20-24	CHEVY SILVERADO 2500 HD	8
15010	20-24	CHEVY SILVERADO 3500 HD	8
15010	20-24	GMC SIERRA 2500 HD	8
15010	20-24	GMC SIERRA 3500 HD	8
15300	75-89	DODGE D100	14
15300	68-74	DODGE D100 PICKUP	14
15300	77-93	DODGE D150	14
15300	68-74	DODGE D200 PICKUP	14
15300	81-93	DODGE D250	14
15300	68-74	DODGE D300 PICKUP	14
15300	81-93	DODGE D350	14
15300	94-01	DODGE RAM 1500	14
15300	94-02	DODGE RAM 2500	14
15300	94-02	DODGE RAM 3500	14
15300	78-96	FORD BRONCO	14
15300	73-83	FORD F-100	14
15300	75-96	FORD F-150	14
15300	73-97	FORD F-250	14
15300	73-97	FORD F-350	14
15302	01-10	CHEVY SILVERADO 2500 HD	16
15302	07-07	CHEVY SILV. 2500 HD CLASSIC	16
15302	01-10	GMC SIERRA 2500 HD	16
15302	07-07	GMC SIERRA 2500 HD CLASSIC	16
15303	97-03	FORD F-150	12
15303	97-99	FORD F-250	12
15306	16-23	NISSAN TITAN XD	12
15307	19-24	CHEVY SILVERADO 1500	8
15307	22-22	CHEVY SILVERADO 1500 LTD	8
15307	19-24	GMC SIERRA 1500	8
15307	22-22	GMC SIERRA 1500 LIMITED	8
15312	01-10	CHEVY SILVERADO 2500 HD	14
15312	07-07	CHEVY SILV. 2500 HD CLASSIC	14
15312	01-06	CHEVY SILVERADO 3500	14
15312	07-07	CHEVY SILV. 3500 CLASSIC	14
15312	08-10	CHEVY SILVERADO 3500 HD	14
15312	01-10	GMC SIERRA 2500 HD	14
15312	07-07	GMC SIERRA 2500 HD CLASSIC	14
15312	01-06	GMC SIERRA 3500	14
15312	07-07	GMC SIERRA 3500 CLASSIC	14
15312	07-10	GMC SIERRA 3500 HD	14
15313	01-10	CHEVY SILVERADO 2500 HD	10
15313	07-07	CHEVY SILV. 2500 HD CLASSIC	10
15313	01-06	CHEVY SILVERADO 3500	10
15313	07-07	CHEVY SILV. 3500 CLASSIC	10
15313	08-10	CHEVY SILVERADO 3500 HD	10
15313	01-10	GMC SIERRA 2500 HD	10
15313	07-07	GMC SIERRA 2500 HD CLASSIC	10
15313	01-06	GMC SIERRA 3500	10
15313	07-07	GMC SIERRA 3500 CLASSIC	10
15313	07-10	GMC SIERRA 3500 HD	10
15316	99-03	FORD F-250 SUPER DUTY	13
15316	99-03	FORD F-350 SUPER DUTY	13

Part #	Years	Make / Model	Pallet Qty
15317	88-00	CHEVY C2500	13
15317	88-00	CHEVY C3500	13
15317	91-00	CHEVY C3500HD	13
15317	88-00	CHEVY K2500	13
15317	88-00	CHEVY K3500	13
15317	88-00	GMC C2500	13
15317	88-00	GMC C3500	13
15317	88-00	GMC K2500	13
15317	88-00	GMC K3500	13
15318	94-02	DODGE RAM 2500	16
15318	94-98	DODGE RAM 3500	16
15319	94-02	DODGE RAM 2500	12
15319	94-02	DODGE RAM 3500	12
15320	96-14	CHEVY EXPRESS 1500	20
15320	96-24	CHEVY EXPRESS 2500	20
15320	96-24	CHEVY EXPRESS 3500	20
15320	96-14	GMC SAVANA 1500	20
15320	96-24	GMC SAVANA 2500	20
15320	96-24	GMC SAVANA 3500	20
15323	99-13	CHEVY SILVERADO 1500	10
15323	07-07	CHEVY SILV. 1500 CLASSIC	10
15323	01-06	CHEVY SILVERADO 1500 HD	10
15323	07-07	CHEVY SILV. 1500 HD CLASSIC	10
15323	99-04	CHEVY SILVERADO 2500	10
15323	99-13	GMC SIERRA 1500	10
15323	07-07	GMC SIERRA 1500 CLASSIC	10
15323	01-06	GMC SIERRA 1500 HD	10
15323	07-07	GMC SIERRA 1500 HD CLASSIC	10
15323	99-04	GMC SIERRA 2500	10
15324	03-06	CADILLAC ESCALADE	20
15324	03-06	CADILLAC ESCALADE ESV	20
15324	03-06	CADILLAC ESCALADE EXT	20
15324	03-06	CHEVY AVALANCHE 1500	20
15324	03-06	CHEVY AVALANCHE 2500	20
15324	03-06	CHEVY SUBURBAN 1500	20
15324	03-06	CHEVY SUBURBAN 2500	20
15324	03-06	CHEVY TAHOE	20
15324	03-06	GMC YUKON	20
15325	88-99	CHEVY C1500	13
15325	88-00	CHEVY C2500	13
15325	88-00	CHEVY C3500	13
15325	88-99	CHEVY K1500	13
15325	88-00	CHEVY K2500	13
15325	88-00	CHEVY K3500	13
15325	88-99	GMC C1500	13
15325	88-00	GMC C2500	13
15325	88-00	GMC C3500	13
15325	88-99	GMC K1500	13
15325	88-00	GMC K2500	13
15325	88-00	GMC K3500	13
15363	11-12	CHEVY SILVERADO 2500 HD	10
15363	11-12	CHEVY SILVERADO 3500 HD	10
15363	11-12	GMC SIERRA 2500 HD	10
15363	11-12	GMC SIERRA 3500 HD	10
15398	07-21	TOYOTA TUNDRA	6
15400	99-99	CHEVY SILVERADO 2500	16
15400	01-06	CHEVY SILVERADO 3500	16
15400	07-07	CHEVY SILV. 3500 CLASSIC	16
15400	08-24	CHEVY SILVERADO 3500 HD	16
15400	07-10	DODGE RAM 3500	16
15400	08-10	DODGE RAM 4500	16
15400	08-10	DODGE RAM 5500	16
15400	99-99	GMC SIERRA 2500	16
15400	01-06	GMC SIERRA 3500	16
15400	07-07	GMC SIERRA 3500 CLASSIC	16
15400	07-24	GMC SIERRA 3500 HD	16
15400	11-24	RAM 3500	16
15400	11-24	RAM 4500	16
15400	11-24	RAM 5500	16
15402	20-23	FORD F-350 SUPER DUTY	8
15409	03-08	DODGE RAM 1500	10
15409	03-10	DODGE RAM 2500	10
15409	03-10	DODGE RAM 3500	10
15409	11-13	RAM 2500	10
15409	11-13	RAM 3500	10
15410	99-16	FORD F-250 SUPER DUTY	10
15410	99-16	FORD F-350 SUPER DUTY	10
15410	08-16	FORD F-450 SUPER DUTY	10

Part #	Years	Make / Model	Pallet Qty
15445	99-20	FORD F-350 SUPER DUTY	10
15445	99-23	FORD F-450 SUPER DUTY	10
15445	99-23	FORD F-550 SUPER DUTY	10
15445	00-23	FORD F-650	10
15460	11-19	CHEVY SILVERADO 2500 HD	10
15460	11-19	CHEVY SILVERADO 3500 HD	10
15460	11-19	GMC SIERRA 2500 HD	10
15460	11-19	GMC SIERRA 3500 HD	10
15572	09-10	DODGE RAM 1500	12
15572	11-18	RAM 1500	12
15572	19-23	RAM 1500 CLASSIC	12
15703	01-04	CHEVY SILVERADO 2500	12
15703	01-10	CHEVY SILVERADO 2500 HD	12
15703	07-07	CHEVY SILV. 2500 HD CLASSIC	12
15703	01-06	CHEVY SILVERADO 3500	12
15703	07-07	CHEVY SILV. 3500 CLASSIC	12
15703	08-10	CHEVY SILVERADO 3500 HD	12
15703	01-04	GMC SIERRA 2500	12
15703	01-10	GMC SIERRA 2500 HD	12
15703	07-07	GMC SIERRA 2500 HD CLASSIC	12
15703	01-06	GMC SIERRA 3500	12
15703	07-07	GMC SIERRA 3500 CLASSIC	12
15703	07-10	GMC SIERRA 3500 HD	12
15704	03-08	DODGE RAM 1500	10
15704	03-10	DODGE RAM 2500	10
15704	03-10	DODGE RAM 3500	10
15704	11-15	RAM 2500	10
15704	11-15	RAM 3500	10
15800	99-99	CHEVY SILVERADO 2500	16
15800	01-06	CHEVY SILVERADO 3500	16
15800	07-07	CHEVY SILV. 3500 CLASSIC	16
15800	08-24	CHEVY SILVERADO 3500 HD	16
15800	07-10	DODGE RAM 3500	16
15800	08-10	DODGE RAM 4500	16
15800	08-10	DODGE RAM 5500	16
15800	99-99	GMC SIERRA 2500	16
15800	01-06	GMC SIERRA 3500	16
15800	07-07	GMC SIERRA 3500 CLASSIC	16
15800	07-24	GMC SIERRA 3500 HD	16
15800	11-24	RAM 3500	16
15800	11-24	RAM 4500	16
15800	11-24	RAM 5500	16
15801	16-24	RAM 2500	8
15801	16-24	RAM 3500	8
15802	17-23	FORD F-250 SUPER DUTY	12
15802	17-23	FORD F-350 SUPER DUTY	12
15802	17-23	FORD F-450 SUPER DUTY	12
15803	14-17	RAM 2500	12
15803	14-17	RAM 3500	12
15804	20-23	FORD F-350 SUPER DUTY	8
15809	03-08	DODGE RAM 1500	8
15809	03-10	DODGE RAM 2500	8
15809	03-10	DODGE RAM 3500	8
15809	11-13	RAM 2500	8
15809	11-13	RAM 3500	8
15810	99-16	FORD F-250 SUPER DUTY	10
15810	99-16	FORD F-350 SUPER DUTY	10
15810	08-16	FORD F-450 SUPER DUTY	10
15845	99-20	FORD F-350 SUPER DUTY	10
15845	99-23	FORD F-450 SUPER DUTY	10
15845	99-23	FORD F-550 SUPER DUTY	10
15845	00-23	FORD F-650	10
15860	11-19	CHEVY SILVERADO 2500 HD	12
15860	11-19	CHEVY SILVERADO 3500 HD	12
15860	11-19	GMC SIERRA 2500 HD	12
15860	11-19	GMC SIERRA 3500 HD	12
31008	08-10	FORD F-250 SUPER DUTY	20
31008	08-10	FORD F-350 SUPER DUTY	20
31008	08-10	FORD F-450 SUPER DUTY	20
31008	08-10	FORD F-550 SUPER DUTY	20
31012	07-20	CADILLAC ESCALADE	18
31012	07-13	CADILLAC ESCALADE EXT	18
31012	07-13	CHEVY AVALANCHE	18
31012	14-18	CHEVY SILVERADO 1500	18
31012	19-19	CHEVY SILVERADO 1500 LD	18
31012	07-14	CHEVY SUBURBAN 1500	18
31012	07-14	CHEVY TAHOE	18
31012	14-18	GMC SIERRA 1500	18

Part #	Years	Make / Model	Pallet Qty
31012	19-19	GMC SIERRA 1500 LIMITED	18
31012	07-14	GMC YUKON	18
31013	01-04	TOYOTA TACOMA	24
31014	99-03	FORD F-250 SUPER DUTY	40
31014	99-03	FORD F-350 SUPER DUTY	40
31015	10-10	DODGE RAM 2500	20
31015	11-18	RAM 2500	20
31016	96-03	CHEVY EXPRESS 1500	24
31016	96-03	CHEVY EXPRESS 2500	24
31016	96-03	CHEVY EXPRESS 3500	24
31016	96-03	GMC SAVANA 1500	24
31016	96-03	GMC SAVANA 2500	24
31016	96-03	GMC SAVANA 3500	24
31017	06-08	DODGE RAM 1500	24
31017	03-09	DODGE RAM 2500	24
31017	03-09	DODGE RAM 3500	24
31018	11-16	FORD F-250 SUPER DUTY	13
31018	11-16	FORD F-350 SUPER DUTY	13
31020	08-13	JEEP LIBERTY	20
31021	96-04	CHEVY BLAZER	24
31021	94-04	CHEVY S10	24
31021	94-01	GMC JIMMY	24
31021	94-04	GMC SONOMA	24
31022	03-07	JEEP LIBERTY	24
31023	11-14	CHEVY SILVERADO 2500 HD	26
31023	11-14	CHEVY SILVERADO 3500 HD	26
31023	11-14	GMC SIERRA 2500 HD	26
31023	11-14	GMC SIERRA 3500 HD	26
31026	92-96	FORD F-150	24
31028	97-06	JEEP WRANGLER	22
31033	11-22	DODGE DURANGO	24
31033	11-17	JEEP GRAND CHEROKEE	24
31034	10-11	HYUNDAI SANTA FE	26
31038	99-02	FORD EXPEDITION	24
31038	99-03	FORD F-150	24
31038	04-04	FORD F-150 HERITAGE	24
31038	99-99	FORD F-250	24
31042	92-94	CHEVY BLAZER	26
31042	88-99	CHEVY C1500	26
31042	88-99	CHEVY K1500	26
31042	92-99	CHEVY K1500 SUBURBAN	26
31042	88-00	CHEVY K2500	26
31042	92-99	CHEVY K2500 SUBURBAN	26
31042	88-00	CHEVY K3500	26
31042	95-99	CHEVY TAHOE	26
31042	88-99	GMC C1500	26
31042	88-99	GMC K1500	26
31042	92-99	GMC K1500 SUBURBAN	26
31042	88-00	GMC K2500	26
31042	92-99	GMC K2500 SUBURBAN	26
31042	88-00	GMC K3500	26
31042	92-99	GMC YUKON	26
31043	92-99	CHEVY C1500 SUBURBAN	24
31043	88-00	CHEVY C2500	24
31043	92-99	CHEVY C2500 SUBURBAN	24
31043	88-00	CHEVY C3500	24
31043	92-99	GMC C1500 SUBURBAN	24
31043	88-00	GMC C2500	24
31043	92-99	GMC C2500 SUBURBAN	24
31043	88-00	GMC C3500	24
31045	08-12	BUICK ENCLAVE	24
31045	09-12	CHEVY TRAVERSE	24
31045	09-11	GMC ACADIA	24
31047	05-10	JEEP GRAND CHEROKEE	24
31048	02-04	JEEP GRAND CHEROKEE	13
31049	97-98	FORD EXPEDITION	22
31049	97-98	FORD F-150	22
31049	97-98	FORD F-250	22
31050	11-13	FORD EDGE	30
31051	97-01	FORD EXPLORER	24
31052	11-16	FORD EXPLORER	26
31053	08-14	FORD E-150	24
31053	08-14	FORD E-250	24
31053	08-14	FORD E-350 SUPER DUTY	24
31054	10-21	TOYOTA 4RUNNER	22
31055	04-07	BUICK RAINIER	16
31055	02-09	CHEVY TRAILBLAZER	16
31055	02-09	GMC ENVOY	16

Part #	Years	Make / Model	Pallet Qty
31056	06-10	JEEP COMMANDER	10
31061	09-15	NISSAN TITAN	13
31063	92-11	FORD RANGER	22
31064	12-15	HONDA PILOT	26
31065	10-10	DODGE RAM 3500	28
31065	11-12	RAM 3500	28
31067	13-18	RAM 3500	20
31068	09-17	FORD EXPEDITION	22
31068	09-14	FORD F-150	22
31068	09-17	LINCOLN NAVIGATOR	22
31069	14-18	CHEVY SILVERADO 1500	20
31069	19-19	CHEVY SILVERADO 1500 LD	20
31069	14-18	GMC SIERRA 1500	20
31069	19-19	GMC SIERRA 1500 LIMITED	20
31071	15-19	CHEVY SILVERADO 2500 HD	26
31071	15-19	CHEVY SILVERADO 3500 HD	26
31071	15-19	GMC SIERRA 2500 HD	26
31071	15-19	GMC SIERRA 3500 HD	26
31073	15-20	CHEVY SUBURBAN	24
31073	15-20	CHEVY TAHOE	24
31073	15-20	GMC YUKON	24
31073	15-20	GMC YUKON XL	24
31074	15-22	CHEVY COLORADO	22
31074	15-22	GMC CANYON	22
31075	16-23	TOYOTA TACOMA	24
31076	14-21	TOYOTA 4RUNNER	24
31077	16-21	NISSAN NV1500	24
31077	16-21	NISSAN NV2500	24
31077	16-21	NISSAN NV3500	24
31077	16-17	NISSAN TITAN XD	24
31078	17-23	FORD F-250 SUPER DUTY	24
31078	17-23	FORD F-350 SUPER DUTY	24
31078	17-19	FORD F-450 SUPER DUTY	24
31080	00-04	DODGE DAKOTA	20
31080	00-03	DODGE DURANGO	20
31081	17-20	NISSAN ARMADA	24
31082	17-20	HONDA RIDGELINE	24
31083	18-20	FORD EXPEDITION	24
31083	15-21	FORD F-150	24
31084	84-01	JEEP CHEROKEE	24
31084	86-92	JEEP COMANCHE	24
31084	84-90	JEEP WAGONEER	24
31086	20-23	JEEP GLADIATOR	0
31086	18-24	JEEP WRANGLER	0
31088	19-21	CHEVY SILVERADO 1500	24
31088	22-22	CHEVY SILVERADO 1500 LTD	24
31088	19-21	GMC SIERRA 1500	24
31088	22-22	GMC SIERRA 1500 LIMITED	24
31089	19-24	RAM 2500	24
31090	19-24	RAM 1500	20
31091	20-24	CHEVY SILVERADO 2500 HD	24
31091	20-24	CHEVY SILVERADO 3500 HD	24
31091	20-24	GMC SIERRA 2500 HD	24
31091	20-24	GMC SIERRA 3500 HD	24
31097	98-99	DODGE DAKOTA	20
31097	98-99	DODGE DURANGO	20
31108	01-06	CHEVY SILVERADO 1500 HD	24
31108	07-07	CHEVY SILV. 1500 HD CLASSIC	24
31108	99-04	CHEVY SILVERADO 2500	24
31108	01-06	CHEVY SILVERADO 2500 HD	24
31108	07-07	CHEVY SILV. 2500 HD CLASSIC	24
31108	01-06	CHEVY SILVERADO 3500	24
31108	07-07	CHEVY SILV. 3500 CLASSIC	24
31108	01-06	CHEVY SUBURBAN 2500	24
31108	01-06	GMC SIERRA 1500 HD	24
31108	07-07	GMC SIERRA 1500 HD CLASSIC	24
31108	99-04	GMC SIERRA 2500	24
31108	01-06	GMC SIERRA 2500 HD	24
31108	07-07	GMC SIERRA 2500 HD CLASSIC	24
31108	01-06	GMC SIERRA 3500	24
31108	07-07	GMC SIERRA 3500 CLASSIC	24
31108	01-06	GMC YUKON XL 2500	24
31109	07-10	CHEVY SILVERADO 2500 HD	20
31109	08-10	CHEVY SILVERADO 3500 HD	20
31109	07-10	GMC SIERRA 2500 HD	20
31109	07-10	GMC SIERRA 3500 HD	20
31114	00-05	FORD EXCURSION	36
31114	99-07	FORD F-250 SUPER DUTY	36

Part #	Years	Make / Model	Pallet Qty
31114	99-07	FORD F-350 SUPER DUTY	36
31114	99-07	FORD F-450 SUPER DUTY	36
31114	99-07	FORD F-550 SUPER DUTY	36
31180	01-07	TOYOTA SEQUOIA	26
31180	00-06	TOYOTA TUNDRA	26
31198	08-18	TOYOTA LAND CRUISER	48
31198	08-21	TOYOTA SEQUOIA	48
31198	07-21	TOYOTA TUNDRA	48
31199	04-08	NISSAN TITAN	18
31221	04-12	CHEVY COLORADO	18
31221	04-12	GMC CANYON	18
31228	05-07	DODGE DAKOTA	16
31230	08-10	DODGE DAKOTA	12
31230	08-09	MITSUBISHI RAIDER	12
31241	05-20	NISSAN FRONTIER	22
31241	05-12	NISSAN PATHFINDER	22
31241	09-12	SUZUKI EQUATOR	22
31270	06-10	HUMMER H3	24
31297	07-09	CHRYSLER ASPEN	20
31297	04-09	DODGE DURANGO	20
31302	00-06	CADILLAC ESCALADE	13
31302	02-06	CHEVY AVALANCHE 1500	13
31302	02-06	CHEVY AVALANCHE 2500	13
31302	99-06	CHEVY SILVERADO 1500	13
31302	07-07	CHEVY SILV. 1500 CLASSIC	13
31302	00-06	CHEVY SUBURBAN 1500	13
31302	00-06	CHEVY TAHOE	13
31302	99-06	GMC SIERRA 1500	13
31302	07-07	GMC SIERRA 1500 CLASSIC	13
31302	00-06	GMC YUKON	13
31302	00-06	GMC YUKON XL 1500	13
31310	92-97	FORD F-250	20
31310	92-97	FORD F-350	20
31311	92-97	FORD F-250	20
31311	92-97	FORD F-350	20
31313	05-15	TOYOTA TACOMA	13
31320	02-08	DODGE RAM 1500	20
31322	07-13	CHEVY SILVERADO 1500	10
31322	07-13	GMC SIERRA 1500	10
31352	03-06	FORD EXPEDITION	24
31352	04-08	FORD F-150	24
31352	06-08	LINCOLN MARK LT	24
31367	07-13	TOYOTA 4RUNNER	20
31367	07-14	TOYOTA FJ CRUISER	20
31368	07-08	FORD EXPEDITION	18
31368	07-08	LINCOLN NAVIGATOR	18
31374	09-10	DODGE RAM 1500	18
31374	11-18	RAM 1500	18
31374	19-23	RAM 1500 CLASSIC	18
31407	01-05	FORD EXPLORER SPORT TRAC	48
31408	87-06	JEEP WRANGLER	48
31432	07-18	JEEP WRANGLER	60
31433	07-18	JEEP WRANGLER	24
31514	05-15	NISSAN XTERRA	20
31540	02-06	FORD EXPLORER	26
31545	07-10	FORD EXPLORER	20
31545	07-10	FORD EXPLORER SPORT TRAC	20
31545	07-10	MERCURY MOUNTAINEER	20
31604	94-01	DODGE RAM 1500	20
31604	94-02	DODGE RAM 2500	20
31604	94-02	DODGE RAM 3500	20
31650	05-10	FORD ESCAPE	20
31650	05-11	MAZDA TRIBUTE	20
31650	05-10	MERCURY MARINER	20
33055	03-07	FORD E-150	24
33055	91-02	FORD E-150 ECONOLINE	24
33055	03-07	FORD E-250	24
33055	91-02	FORD E-250 ECONOLINE	24
33055	91-98	FORD E-350 ECONOLINE	24
33055	99-07	FORD E-350 SUPER DUTY	24
33328	03-08	HONDA PILOT	24
33328	06-14	HONDA RIDGELINE	24
70101	11-13	DODGE DURANGO	40
70101	11-21	JEEP GRAND CHEROKEE	40
70101	22-22	JEEP GRAND CHEROKEE WK	40
70102	07-18	JEEP WRANGLER	12
70103	19-23	JEEP CHEROKEE	40
70104	12-14	HONDA CR-V	9

Part #	Years	Make / Model	Pallet Qty
70105	18-24	JEEP WRANGLER	12
70106	15-17	FORD EXPEDITION	45
70106	09-20	FORD F-150	45
70106	15-17	LINCOLN NAVIGATOR	45
70107	15-20	CHEVROLET COLORADO	9
70107	15-20	GMC CANYON	9
70108	18-22	CHEVROLET EQUINOX	8
70109	10-17	CHEVROLET EQUINOX	9
70109	10-17	GMC TERRAIN	9
70110	07-18	JEEP WRANGLER	12
70111	15-20	CADILLAC ESCALADE	48
70111	15-20	CHEVROLET SUBURBAN	48
70111	15-20	CHEVROLET TAHOE	48
70111	15-20	GMC YUKON	48
70111	15-20	GMC YUKON XL	48
70112	97-06	JEEP WRANGLER	10
70113	16-18	FORD FOCUS	8
70114	16-19	FORD EXPLORER	8
70115	07-11	HONDA CR-V	8
70116	12-20	CHEVROLET SONIC	9
70117	16-20	BUICK ENVISION	8
70118	17-19	GMC ACADIA	12
70119	14-19	FORD FIESTA	16
70120	16-18	CHEVROLET SILVERADO 1500	45
70120	19-19	CHEVROLET SILVERADO 1500 LD	45
70120	16-20	CHEVROLET SUBURBAN	45
70120	16-20	CHEVROLET TAHOE	45
70120	16-18	GMC SIERRA 1500	45
70120	19-19	GMC SIERRA 1500 LIMITED	45
70121	16-18	RAM 1500	40
70121	19-23	RAM 1500 CLASSIC	40
70123	10-16	CADILLAC SRX	9
70124	08-17	BUICK ENCLAVE	8
70124	13-16	GMC ACADIA	8
70124	17-17	GMC ACADIA LIMITED	8
70125	15-18	FORD EDGE	15
70125	16-18	LINCOLN MKX	15
70127	19-23	FORD RANGER	54
70128	05-07	JEEP LIBERTY	20
70129	20-23	JEEP GLADIATOR	12
70130	15-17	FORD EXPEDITION	54
70130	09-23	FORD F-150	54
70130	15-17	LINCOLN NAVIGATOR	54
70131	15-19	CHEVY SILVERADO 2500 HD	45
70131	15-19	CHEVY SILVERADO 3500 HD	45
70131	15-19	GMC SIERRA 2500 HD	45
70131	15-19	GMC SIERRA 3500 HD	45
70132	19-23	JEEP CHEROKEE	64
70133	20-23	FORD F-250 SUPER DUTY	45
70133	20-23	FORD F-350 SUPER DUTY	45
70134	14-18	JEEP CHEROKEE	32
70135	13-19	FORD FLEX	6
70135	13-15	LINCOLN MKS	6
70135	13-19	LINCOLN MKT	6
70136	19-21	CHEVROLET TRAVERSE	64
70137	17-19	FORD F-250 SUPER DUTY	35
70137	17-19	FORD F-350 SUPER DUTY	35
70138	19-22	CHEVROLET BLAZER	10
70139	18-22	FORD EXPEDITION	45
70139	18-22	LINCOLN NAVIGATOR	45
70140	21-21	FORD BRONCO	210
70141	19-24	CHEVROLET SILVERADO 1500	108
70141	22-22	CHEVY SILVERADO 1500 LTD	108
70141	19-24	GMC SIERRA 1500	108
70141	22-22	GMC SIERRA 1500 LIMITED	108
70142	03-10	DODGE RAM 2500	10
70142	03-10	DODGE RAM 3500	10
70142	11-18	RAM 2500	10
70142	11-18	RAM 3500	10

ALL PRODUCTS LISTED NUMERICALLY

Part #	Description	MP	IP
16000	LOOP,SAFETY CHAIN,5	1	0
16040	CROSSWING SP, BASE	1	0
16051	CROSSWING KIT, 1660	1	0
16052	S20 KIT, 16520 & 16	1	0
16053	S20 KIT, 16520 & 16	1	0
16055	RAIL MOUNTED GOOSEN	1	0
16085	RAIL MOUNTED GOOSEN	1	0
16090	30K SPYDER GOOSENEC	1	0
16100	5TH WHEEL MOUNTING	1	0
16101	INSTALLATION HARDWA	1	0
16103	BOLT KIT,FIFTH WHEE	1	0
16104	5TH WHEEL RAIL KIT,	1	0
16111	UNIVERSAL RAIL HARD	1	0
16115	E16 16K 5TH WHEEL U	1	0
16116	E16 KIT, 16115 & 16	1	0
16120	A16 5TH WHEEL	1	0
16121	A16 5TH WHEEL WITH	1	0
16130	Q20 FIFTH WHEEL W/	1	0
16131	Q20 KIT, 16130 & 16	1	0
16140	A20 5TH WHEEL HITCH	1	0
16141	A20 5TH WHEEL WITH	1	0
16150	RAILS,5TH WHL,W/CNT	1	0
16180	A25 5TH WHEEL HITCH	1	0
16181	A25 5TH WHEEL WITH	1	0
16190	A30 5TH WHEEL HITCH	1	0
16191	A30 HITCH HITCH W/	1	0
16200	CARBIDE BLACK 5TH W	1	0
16204	CARBIDE 5TH WHEEL R	1	0
16205	HD 5TH WHEEL RAILS	1	0
16210	X5 ADAPTER PLATE	1	0
16220	X5 ADAPTER PLATE	1	0
16245	Q24 FIFTH WHEEL W/	1	0
16246	Q24 KIT,16245 & 162	1	0
16265	Q25 FIFTH WHEEL W/	1	0
16266	Q25 KIT,16265 & 162	1	0
16310	X5 B & W ADAPTER PL	1	0
16315	POWERRIDE 30K 5TH W	1	0
16320	POWERRIDE 30K 5TH W	1	0
16321	POWERRIDE 30K HITCH	1	0
16505	16115 E5 ADAPTER KI	1	0
16511	S20 KIT, 16515 & 16	1	0
16515	E16 FIFTH WHEEL HEA	1	0
16516	E16 KIT, 16515 & 16	1	0
16520	A16 5TH WHEEL HEAD	1	0
16521	A16 5TH WHEEL WITH	1	0
16530	Q20 FIFTH WHEEL HEA	1	0
16531	S20 KIT, 16540 & 16	1	0
16536	Q20 KIT,16530 & 165	1	0
16540	A20 5TH WHEEL HEAD	1	0
16541	A20 5TH WHEEL WITH	1	0
16545	Q24 FIFTH WHEEL HEA	1	0
16546	Q24 KIT,16545 & 165	1	0
16550	R20 ROLLER, FIFTH W	1	0
16551	S25 KIT, 16580 & 16	1	0
16560	R16 ROLLER, FIFTH W	1	0
16564	S20 20K FIFTH WHEEL	1	0
16570	R24 ROLLER, FIFTH W	1	0
16574	S25 25K FIFTH WHEEL	1	0
16580	A25 5TH WHEEL HEAD	1	0
16590	A30 5TH WHEEL HEAD	1	0
16600	CROSSWING, 20K 5TH	1	0
16602	CROSSWING 20K SINGL	1	0
16611	S20 KIT, 16515 & 16	1	0
16612	CROSSWING SFT CHAIN	1	0
16613	CROSSWING SAFETY CH	1	0
16614	CROSSWING SFTY CHAI	1	0
16615	CROSSWING SAFETY CH	1	0
16616	E16 KIT, 16515, 165	1	0

Part #	Description	MP	IP
16621	A16 5TH WHEEL\R16 R	1	0
16631	S20 KIT, 16540 & 16	1	0
16636	Q20 KIT,16530,16550	1	0
16641	A20 5TH WHEEL R20 R	1	0
16646	Q24 KIT,16545,16570	1	0
16651	S25 KIT, 16580 & 16	1	0
16721	10 IN 5TH WHEEL LUB	40	0
16722	LUBE PLATE,5TH WHEE	50	0
16900	SPACER KIT,5TH WHL	1	0
16901	SPACER KIT,5TH WHL	1	0
16902	5TH WHEEL REPL PINS	40	0
16904	16130 SERVICE KIT,L	1	0
16906	16140 A20 LEG KIT	1	0
16907	5TH WHEEL LEG KIT	1	0
16908	POWERRIDE 30K REPL	1	0
16913	Q24 LEG KIT	1	0
16914	16125-TCA TOP CLIP	1	0
16920	16120 - LEG KIT	1	0
16963	Q25 LEG KIT	1	0
16991	E16 WEDGE KIT	1	0
16992	A-SERIES WEDGE KIT	5	0
16994	WEDGE A SERIES NEW	5	0
17003	SNAP-UP BRACKET WD	1	0
17005	SNAP-UP BRACKET WD	1	0
17008	WD,HOOK-UP BRKT,SIN	1	0
17050	600 TW ROUND BAR WD	1	0
17051	800 TW ROUND BAR WD	1	0
17052	1000 TW ROUND BAR W	1	0
17057	1400 TW ROUND BAR W	1	0
17062	1000 TW ROUND BAR W	1	0
17063	1400 TW ROUND BAR W	1	0
17071	600 TW REPLACEMENT	1	0
17072	800 TW REPLACEMENT	1	0
17073	1000 TW REPLACEMENT	1	0
17074	1400 TW REPLACEMENT	1	0
17075	WD REPLACEMENT HEAD	1	0
17076	BOLT KIT	1	0
17100	ADJ HITCH BAR 12 IN	1	0
17102	ADJ HITCH BAR 14 IN	1	0
17103	ADJ HITCH BAR 16 IN	1	0
17109	RETAINER PACKAGE	50	0
17111	SPRING BAR CHAIN &	16	0
17112	LIFT HANDLE	10	0
17114	REPLACEMENT 1 IN RI	25	0
17120	ADJ HITCH BAR 12 IN	1	0
17121	ADJ HITCH BAR 14 IN	1	0
17122	ADJ HITCH BAR 16 IN	1	0
17123	ADJ HITCH BAR 9 IN	1	0
17124	ADJ HITCH BAR 11 IN	1	0
17125	ADJ HITCH BAR 10 IN	1	0
17131	2.5" FORGED WD SHAN	1	0
17132	2.5" FORGED WD SHAN	1	0
17133	2" FORGED WD SHANK,	1	0
17134	2" FORGED WD SHANK,	1	0
17200	SWAY CONTROL KIT	1	0
17201	SWAY CONTROL A-FRAM	45	0
17208	(2)OPTIONAL SNAP UP	1	0
17302	WEIGHT DISTRIBUTION	1	0
17303	WD,1000#LONG TBAR R	1	0
17307	WEIGHT DISTRIBUTION	1	0
17308	WD,800#LONG TBAR RE	1	0
17312	WD ADJUSTMENT ROD K	10	0
17314	WD WASHER SERVICE K	50	0
17322	WD,TRUNNION,SHORT B	1	0
17332	WD,TRUNNION,SHORT B	1	0
17333	WD,TRUNNION,1500 LB	1	0
17334	WD,600#SHORT TBAR R	1	0
17335	WD,800#SHORT TBAR R	1	0

Part #	Description	MP	IP
17336	WD,1000#SHORT TBAR	1	0
17337	1500# SHORT SPRING	1	0
17348	LDWD SPRING BAR W/C	1	0
17350	BOLT KIT FOR TRUNNI	1	0
17352	WD, 1000# DEEP DROP	1	0
17422	WD,TRUNNION,1500 LB	1	0
17499	WD, 800# W/INTEGRAT	1	0
17500	WD,1000# W/INTEGRAT	1	0
17501	WD 1500# W/INTEGRAT	1	0
17506	WD REPLACEMENT HEAD	1	0
17507	WD REPLACEMENT HEAD	1	0
17508	REPLACEMENT INT-WD	1	0
17509	1500# REPLACEMENT H	1	0
17512	TRU-TRACK TENSION B	1	0
17513	REPLACEMENT L-PINS	100	0
17515	REPLACEMENT BRACKET	1	0
17516	REPLACEMENT BRACKET	1	0
17535	800# REPLACEMENT SP	4	0
17536	1000# REPLACEMENT S	8	0
17537	1500# REPLACEMENT S	8	0
17550	BOLT KIT FOR INT-WD	18	0
17554	BOLT KIT FOR INT-WD	1	0
17600	TRU TRACK 2P WD W/O	1	0
17601	TRU TRACK 2P WD W/S	1	0
18007	STRAP,REPLACEMENT,Q	100	50
18008	BIKE RACK TOWABLE S	1	0
18013	BIKE RACK,CLAMP-ON	1	0
18016	BIKE BEAM	15	0
18020	2-BIKE RACK - EXTEN	1	0
18021	2-BIKE RACK, DUAL A	1	0
18029	RACK,2-BIKE,DUAL AR	1	0
18030	RACK,2-BIKE,DUAL AR	2	0
18050	STRAP, BIKE RACK	60	0
18064	RACK,4-BIKE,TAPERED	1	0
18065	RACK,5-BIKE,TAPERED	2	0
18085	BIKE RACK, 2-BIKE,	1	0
18087	BIKE RACK, 4-BIKE ,	1	0
18088	ALUMINUM 2-BIKE, TI	1	0
18091	FAT TIRE BIKE RACK	1	0
18100	CARRIER,CARGO,ALUMI	2	0
18101	CARRIER,CARGO,ATV	1	0
18109	CARGO CARRIER FOLDI	1	0
18110	CARGO CARRIER,48"X2	1	0
18112	ALUMINUM CARGO CARR	1	0
18113	ALUMINUM CARGO CARR	1	0
18115	ROOF RACK,EXPANDABL	1	0
18117	ROOF RACK,EXTENSION	1	0
18118	ALUMINUM CROSSBARS	1	0
18145	CARGO CARRIER,KNOCK	2	0
18150	CARGO CARRIER BASKE	1	0
18151	CARGO CARRIER BASKE	1	0
18152	CARGO CARRIER,60X24	1	0
18153	CARGO CARRIER,60X24	1	0
18200	CARGO NET,ROOF RACK	12	0
18201	CARGO NET,EXTENDED	12	0
18202	CARGO NET	12	0
18210	CARGO CARRIER BAG 1	1	0
18211	CARGO CARRIER BAG 2	1	0
18220	ROOF RACK BAG 38"	1	0
18221	ROOF RACK BAG 59"	1	0
18320	ALUMINUM KAYAK RACK	1	0
18325	TAILGATE CARGO EXTE	1	0
18401	ACTIVELINK SHANK 1-	1	0
18402	ACTIVELINK SHANK 2"	1	0
18410	ACTIVELINK SE 2-BIK	1	0
18411	ACTIVELINK SE 4-BIK	1	0
18412	ACTIVELINK ULTRA 4-	1	0
18415	ACTIVELINK CARGO CA	1	0

Part #	Description	MP	IP
18500	SEAT DEFENDER, FRON	12	0
18501	SEAT DEFENDER, FRON	12	0
18502	SEAT DEFENDER, FRON	12	0
18510	SEAT DEFENDER, REAR	12	0
18511	SEAT DEFENDER,REAR,	12	0
18512	SEAT DEFENDER,REAR,	12	0
18520	XL SEAT DEFENDER,BE	12	0
18521	XL SEAT DEFENDER, B	12	0
18522	XL SEAT DEFENDER,BE	12	0
18530	UNIV CARGO DEFENDER	12	0
19030	2 IN X 2 IN RECEIVE	1	0
19031	2 IN X 2 IN BUMPER	1	0
19050	2 IN X 2 IN REC HIT	1	0
19100	TRAVEL TRAILER BUMP	1	0
19101	RECEIVER HITCH,BUMP	1	0
19102	SLIDER REPL PARTS,	30	0
19103	SLIDER REPL PARTS,	30	0
19104	SLIDER REPL PARTS,	30	0
19105	SLIDER REPL PARTS P	30	0
19106	SLIDER REPL PARTS,	100	0
19107	SLIDER REPL PARTS,	30	0
19201	16017, 16020 REPL R	1	0
19202	16017, 16020 REPL H	1	0
19203	16021,16022 LRG TBO	1	0
19204	16021,16022 SM TBOL	1	0
19205	16021 REPL HANDLES	1	0
19206	16022 REPL HANDLES	1	0
19207	16023 REPL HANDLES	1	0
19208	16023 REPL HARDWARE	1	0
19209	16025 REPL HANDLES	1	0
19210	16025 HARDWARE KIT	1	0
19211	16120 REPL YOKE SUP	1	0
19212	A-SERIES REPL HANDL	1	0
19213	16140 REPL YOKE SUP	1	0
19214	16180 REPL YOKE SUP	1	0
19215	Q-SERIES REPL HANDL	1	0
19216	Q-SERIES REPL LOCK	1	0
19217	R16-24 REPL ROLLER	1	0
19218	R16-24 HEAD MOUNTIN	1	0
19219	R16 HANDLE ASSEMBLY	1	0
19220	R20 & R24 HANDLE AS	1	0
19221	16125 SERVICE KIT 3	1	0
19222	16125 SERVICE KIT 9	1	0
19223	REPL GREASE ZERK QT	1	0
19224	16125 HANDLE LOCK R	1	0
19225	16130 REPL LEG SPAC	1	0
19226	16115 HEAD PIN KIT	1	0
19227	16115 HEAD SPRING K	1	0
19228	16115 REPL HANDLE A	1	0
19231	18115 REPL HARDWARE	1	0
19232	REPL HARDWARE FOR 1	1	0
19233	REPL HARDWARE FOR 1	1	0
19234	REPL REFLECTORS FOR	1	0
19235	REPL HARDWARE FOR 1	1	0
19236	18153 REPL HARDWARE	1	0
19238	18085, 18087 SHORT	1	0
19239	18085, 18087 LONG L	1	0
19240	18085, 18087 RIGHT	1	0
19241	18085, 18087 LEFT S	1	0
19242	18115 REPL HARDWARE	1	0
19244	ACTIVELINK VELCRO S	100	0
19245	ACTIVELINK CHANNEL	10	0
19246	ACTIVELINK FRAME CU	50	0
19247	ACTIVELINK ARM CAP	50	0
19248	ACTIVELINK PIN & CL	50	0
19249	ACTIVELINK SHANK HA	25	0
19250	60671 REPL PIN & LY	40	0

MP = MASTER PACK / **IP** = INNER PACK

Part #	Description	MP	IP
19251	60691 REPL PIN & LY	40	0
19253	60611, 60619 CENTER	5	0
19254	EZR SAFETY CHN UBOL	3	0
19255	EZR/DBLE LCK REPL H	5	0
19256	EZR/DBL LCK REPL CH	15	0
19257	EZR/DBL LCK REPL HA	10	0
19258	EZR/DBL LCK REPL LO	6	0
19259	EZR/DBL LCK CYLYNDE	144	0
19260	DOUBLELOCK SAFETY C	5	0
19261	TOWBAR REPL PINS AN	1	0
19262	RAMBLER RUBBER BOOT	1	0
19263	REPL 16MM ANTIRATTL	50	0
19264	18088 WHEEL BASKET	1	0
19265	18088 TIRE STRAP RE	10	0
19267	18088 REPLACEMENT E	1	0
19268	QUICK MOUNT SHANK H	25	0
19269	POWERRIDE REPL LUBE	1	0
19272	REPL QUICK PIN LANY	60	0
19273	REPL CROSSWING HAND	15	0
19274	REBELLION ANTI-RATT	200	0
19275	CHN MNT TONGUE ANTI	50	0
19276	REPL 2-POINT SPRING	1	0
19277	REPL 2-POINT WD HEA	1	0
19278	REPL 2-POINT HARDWA	16	0
19279	REPL HANDLE KIT CRO	20	0
19280	REPL COUPLER TUBE C	4	0
19282	REPL SKID PAD CROSS	30	0
19283	WEDGE CROSSWING TUR	1	0
19284	REPL RODNUT FOR 12K	10	0
19285	REPL ROCKER BALL IN	25	0
19286	CROSSWING REPL HARD	25	0
19287	REPL A-SERIES TORSI	50	0
19288	WEDGE CROSSWING SID	1	0
19289	REPL 17200 SPRING C	100	0
19290	REPL 1/2 INCH ANTIR	50	0
19295	REPL UPPER WELDMENT	1	0
19296	REPL LOWER HEAD ASS	1	0
19745	ADJUSTABLE TOW BAR	1	0
19746	REPLACEMENT SAFETY	50	0
19748	BUMPER BRACKET KIT	4	0
19749	TOW BAR BLACK VINYL	1	0
19750	UNIVERSAL TOW BAR	1	0
20001	WRENCH,BOX END,1.12	20	0
20002	MIRROR	10	0
21100	REDUCER BUSHING 1 I	1	0
21101	REDUCER BUSHING 1 I	120	0
21200	REDUCER BUSHING 1 1	1	0
21201	REDUCER BUSHING 1 1	120	0
21300	REDUCER BUSHING 1 3	300	0
21301	REDUCER BUSHING 1 3	1	0
21400	1/2 IN HITCH PIN WI	60	0
21401	1/2 IN HITCH PIN WI	24	6
21403	1/2" GROOVED HITCH	120	0
21404	1/2" GROOVED PIN&CL	24	6
21410	1/2" PIN & CLIP, CO	120	0
21411	1/2" PIN & CLIP, CO	30	0
21500	5/8 IN HITCH PIN WI	60	0
21501	5/8 IN HITCH PIN WI	24	6
21502	UNIVERSAL RECEIVER	24	6
21504	5/8" GROOVED HITCH	60	0
21505	5/8" GROOVED PIN&CL	30	0
21506	5/8" GROOVED PIN &	24	6
21507	5/8" GROOVED PIN &	40	0
21510	5/8" PIN & CLIP, CO	60	0
21511	5/8" PIN & CLIP, CO	30	0
21541	HITCH PIN,CHRM,1/2"	48	6
21551	5/8 IN CHROME SWIVE	24	6
21561	1/2 IN SWIVL HITCH	24	6
21578	5/8 IN HITCH PIN &	80	0
21579	5/8 IN HITCH PIN WI	25	0
21580	5/8" HITCH PIN FOR	60	0
21581	5/8" HITCH PIN SUPE	24	6
21582	5/8" CD GROOVED PIN	60	0

Part #	Description	MP	IP
21583	5/8" CD GROOVED PIN	24	6
21600	CLIP FOR HITCH PIN,	200	0
21601	CLIP FOR HITCH PIN	30	0
21602	HITCH PIN CLIP, 3 P	100	0
21728	PROTECTIVE RUBBER C	6	0
21800	PLASTIC HITCH BALL	50	0
21801	PLASTIC HITCH BALL	50	0
21810	BALL COVER,2 5/16"	50	0
21811	BALL COVER,2 5/16"	50	0
22100	2 IN X 2 IN TUBE CO	40	0
22101	2 IN X 2 IN TUBE CO	20	0
22110	2 IN X 2 IN TUBE CO	40	0
22111	2 IN X 2 IN TUBE CO	20	0
22170	2 IN X 2 IN TUBE CO	100	0
22171	2 IN X 2 IN TUBE CO	20	0
22178	BEARING PROTECTOR 2	24	0
22180	2 IN X 2 IN TUBE CO	100	0
22181	2 IN X 2 IN TUBE CO	20	0
22198	BEARING PROTECTOR 2	4	0
22200	HITCH BAG IN A CLEA	1	0
22232	DUST COVER, BEARING	24	0
22244	BEARING PROT,2.44"	24	0
22271	1 1/4" RECVR TUBE C	800	0
22272	COVER,RCVR TUBE,2"	200	0
22275	1 1/4" RECVR TUBE C	120	0
22276	COVER,RCVR TUBE,2"	60	0
22277	COVER RECVR TUBE, 2	100	0
22278	COVER, RCVR TUBE, 2	96	24
22279	CURT 2" RCVR TUBE C	220	0
22315	ANTI-RATTLE FOR 1 1	50	0
22320	2-1/2" ANTI RATTLE	12	4
22321	ANTI-RATTLE FOR 2 I	50	0
22322	PROFINISHING PACK (	1	0
22323	5/8" ANTI-RATTLE PI	18	0
22325	2" ANTI-RATTLE CLAM	12	4
22401	TOW HOOK W/HARDWARE	30	0
22411	TOW HOOK W/HARDWARE	30	0
22420	TOW HOOK CHROME 100	30	0
22430	TOW HOOK BLACK 1000	30	0
22750	TUBE COVER 2 IN X 2	40	0
22751	STEEL TUBE COVER/PK	20	0
22800	CHOCKS,WHEEL,PAIR	4	0
22801	HD RUBBER WHEEL CHO	384	0
22802	HD WHEEL CHOCK 2PK	1	0
22803	HD WHEEL CHOCK 1PK	1	0
23020	1/2 IN HITCH LOCK 1	24	6
23021	5/8 IN HITCH LOCK 3	24	6
23022	COUPLER LOCK BRASS	24	6
23024	1/2" HITCH PIN LOCK	48	24
23025	3 IN HITCH LOCK 300	48	24
23079	LOCK,COUPLER,ROLLED	12	0
23081	LOCK,BLOCK HEAD *	12	0
23082	CPLER LCK 1-7/8", 2	12	6
23083	KEYED ALIKE 23082 &	8	4
23084	DISK LOCK 1-PACK	24	6
23085	DISK LOCK 3-PACK KE	24	6
23086	KEYED ALIKE LOCK CO	12	0
23088	KEYED ALIKE LOCK CO	12	0
23090	COUPLER LOCK	6	0
23175	WHEEL CHOCK LK	1	0
23178	DUST COVER,BEARING,	50	0
23179	TRAILER LOCK	6	1
23198	DUST COVER,BEARING,	50	0
23209	3/4" WHEEL BEARING	1	0
23210	1" WHEEL BEARING KI	50	0
23211	1-1/16" WHEEL BEARI	50	0
23232	DUST COVER,BEARING,	50	0
23244	DUST COVER,BEARING,	1	0
23255	LOCK,KING PIN,DUMBE	12	0
23256	LOCK, FIFTH WHEEL	20	0
23501	1/2" DOGBONE LOCK,	48	24
23502	5/8 IN RIGHT ANGLE	48	24
23503	ADJUSTABLE LOCK COU	48	24

Part #	Description	MP	IP
23504	5/8 IN RIGHT ANGLE	48	24
23505	LOCK SET, HITCH & C	24	6
23506	1/2" W/ 5/8" SLEEVE	48	24
23510	5/8 IN PUSH BUTTON	48	24
23515	5/8 IN DOGBONE LOCK	48	24
23516	5/8 IN DOGBONE LOCK	48	24
23517	5/8" DOGBONE LOCK,S	48	24
23518	5/8 IN DOGBONE LOCK	24	6
23519	5/8 IN DOGBONE LOCK	48	24
23520	7/8IN SPAN COUPLER	48	24
23521	7/8 IN SPAN COUPLER	48	24
23522	2-1/2" SPAN COUPLER	48	24
23523	3-3/8" SPAN COUPLER	48	24
23526	5/8 DOGBONE WITH 7/	48	24
23527	5/8 IN DOGBONE LOCK	48	24
23528	5/8 IN DOGBONE LOCK	48	24
23541	COUPLER LK,MID LEVE	1	0
23546	COUPLER LOCK, SOLID	50	0
23556	LOCK SET,KEYED ALIK	1	0
23562	SPARE TIRE LOCK PAC	1	0
23580	SS SLEEVE ADAPTER R	1	0
23581	HITCH PIN,1/2" PIVO	48	24
23582	SS PIVOT LOCK HITCH	48	24
23659	1 7/8 IN 2 IN AND 2	6	1
23666	CABLE LOCK	12	0
25002	WINCH, 900LB. W/SAF	12	0
25010	5/16 IN COUPLER SAF	250	0
25011	5/16 IN COUPLER SAF	24	6
25012	K-8 1/4 IN COUPLER	200	0
25013	PIN,COUPLER,.25" W/	24	6
25034	5/16" SAFETY PIN W/	1	0
25035	5/16" SAFETY PIN W/	100	0
25080	COUPLER SAFETY PIN	300	0
25081	COUPLER SAFETY PIN	24	6
25094	REPAIR KIT, 1.875"	32	0
25100	COUPLER, 2 X 3" STR	8	2
25101	COUPLER,2",A-FRAME,	6	0
25105	COUPLER, 1.875 X 2.	8	0
25128	COUPLER, 1.875 X 2"	8	0
25131	COUPLER, 1.875 X 3"	8	2
25135	COUPLER, 2 X 2.5" 3	8	2
25138	COUPLER, 2 X 3" 350	8	2
25153	COUPLER, 2 X 2" 350	8	2
25194	REPAIR KIT, 2" COUP	32	0
25200	COUPLER,2 5/16",A-F	6	0
25210	COUPLER,2",A-FRAME,	6	0
25217	COUPLER,2",A-FRAME,	1	0
25227	COUPLER,2 5/16",A-F	1	0
25294	REPAIR KIT,2" COUPL	32	0
25319	COUPLER,2",ADJST,70	1	0
25328	COUPLER,2 5/16",AJU	1	0
25329	COUPLER,2 5/16",AJU	1	0
25330	COUPLER,2 5/16" ADJ	6	0
25388	BOLT KIT, ADJUST CP	40	0
25389	25388 PACKAGED BOLT	6	0
25470	STAMPED 2" X 2" 350	4	0
25471	STAMPED 2" X 2.5" 3	4	0
25472	STAMPED 2" X 3" 350	4	0
25474	STAMPED A-FRAME 2-5	2	0
28000	SAFETY PIN 3/8" W/	1	0
28001	SAFETY PIN 3/8" W/	1	0
28100	JACK,BOLT ON SNAP R	100	0
28101	JACK,BOLT SNAP RING	1	0
28112	JACK,BOLT ON SWIVEL	100	0
28113	JACK,BOLT ON SWIVEL	1	0
28115	JACK,BOLT ON SWIVEL	80	0
28116	JACK,BOLT ON SWIVEL	1	0
28155	JACK,BOLT,SWIVEL,2	80	0
28156	JACK,BOLT,SWIVEL,2	1	0
28200	JACK,A FRAME TOP WI	200	0
28202	JACK,A FRAME TOP WI	200	0
28203	JACK,A FRAME TOPWIN	1	0
28204	JACK,A FRAME SIDE W	160	0

Part #	Description	MP	IP
28250	JACK,A FRAME TOP WI	200	0
28255	JACK,AFRAME TOPWIND	200	0
28270	FOOT, JACK WITH HAR	60	0
28271	FOOT, JACK WITH HAR	1	0
28272	FOOT, JACK 1.7", ZI	36	0
28273	FOOT, JACK 1.7", ZI	1	0
28274	FOOT, JACK 8.5", ZI	10	0
28275	FOOT, JACK 8.5", ZI	1	0
28276	WHEEL, JACK CASTER,	10	0
28277	WHEEL, JACK CASTER,	1	0
28278	PIN, SAFETY FOR JAC	1	0
28279	PIN, SAFETY FOR JAC	40	0
28300	JACK,WELD,TOP WIND,	160	0
28301	JACK,WELD,TOP WIND,	1	0
28302	JACK,WELD ON,SIDE W	120	0
28304	JACK,WELD,TOP WIND,	130	0
28306	JACK,WELD ON,2000 L	110	0
28320	JACK,PIPE MNT,TOPWI	160	0
28321	JACK,PIPE MNT,SIDEW	130	0
28322	JACK,PIPE MNT,TOP W	160	0
28323	JACK,PIPE MNT,TOPWI	1	0
28324	JACK,PIPE MNT,SIDE	130	0
28350	JACK,PIPE MNT,TOPWI	160	0
28351	JACK,PIPEMNT,TOPWIN	1	0
28354	JACK,PIPE MNT,SIDEW	120	0
28356	JACK,PIPE MNT,TOPWI	160	0
28358	JACK,PIPE MNT,SIDEW	120	0
28359	JACK, 5000 LB,, SQ.	100	0
28512	JACK, HD SQUARE 10K	1	0
28570	JACK,HD SQUARE TOP	90	0
28575	JACK,HD SQUARE SIDE	90	0
28910	PART, JACK MARINE M	1	0
28911	PART, JACK MNT BARS	50	0
28912	PART,JACK CASTER WH	20	0
28913	PART,JACK FULL MARI	1	0
28914	PART,JACK GEAR KIT,	1	0
28921	PART,JACK TOP WIND	50	0
28922	PART,JACK BEARING 2	1	0
28923	PART,JACK SIDE WIND	1	0
28924	PART,JACK GEAR KIT	1	0
28925	PART,JACK CAP 2K SI	1	0
28926	PART,JACK BLACK HAN	1	0
28927	PART,JACK BLACK HAN	1	0
28930	PART,JACK FEMALE PI	1	0
28931	PART,JACK MALE PIPE	100	0
28932	PART,JACK MALE PIPE	100	0
28934	PART,JACK 9/16" PIN	50	0
28935	PART,JACK 5/8" PIN	50	0
28937	PART,JACK 2K/5K FUL	50	0
28938	PART,JACK RND TB WE	50	0
28939	PART,JACK 2" SNAP R	1	0
28940	PART,JACK 1/2" PLUN	1	0
28941	PKGD, JACK 2" SNAP	100	0
28942	PKGD, JACK MALE PIP	40	0
28943	PKGD, JACK MALE PIP	40	0
28944	PKGD, JACK 2K/5K HA	20	0
28950	PART,JACK GEAR KIT	1	0
28951	PART,JACK FULL 12K	1	0
28952	PART,JACK CAP 12K	1	0
28953	PART,JACK HANDLE CL	120	0
28954	PART,JACK 12K BEARI	1	0
28955	PART,JACK 12K PLUNG	1	0
28957	PART,JACK INNER PIP	1	0
28958	PART,JACK GEAR KIT	1	0
28959	PART,JACK FULL 7K H	50	0
28960	PART,JACK 7K GEAR H	1	0
28961	PART,JACK CAP 7K	1	0
28962	PART,JACK 7K DROP L	25	0
28963	PART,JACK 7K DROP L	50	0
28964	PART,JACK FULL 7K B	50	0
28965	PART,JACK 7K BEARIN	1	0
29007	2 IN 20 FT NYLON WI	24	0

MP = MASTER PACK / **IP** = INNER PACK

LIPPERT

Part #	Description	MP	IP
29423	900 LB WINCH	12	0
29424	1200 LB WINCH	8	0
29427	1700 LB WINCH	8	0
29428	1900 LB WINCH	8	0
29433	900 LB WINCH W/15'	12	0
29435	1400 LB WINCH W/20'	8	0
29450	15' WINCH STRAP	30	0
29451	20' WINCH STRAP	30	0
31001	STEP PAD	4	0
31002	LICENSE PLATE HOLDE	4	0
31005	WINCH MOUNT HANDLES	1	0
31006	SPARE TIRE MOUNT	1	0
31007	SKID SHIELD	1	0
31010	WINCH MOUNT	1	0
32001	RECEIVER GRIP STEP	1	0
32002	RECEIVR GRIP STEP K	1	0
40001	1 7/8 X 3/4 X 1 5/8	12	0
40002	1 7/8 X 1 X 2 1/8 H	12	0
40003	2 X 3/4 X 1 3/4 HIT	12	0
40004	2 X 1 X 2 1/8 HITCH	12	0
40005	2 5/16 X 1 X 2 1/8	12	0
40006	2 5/16X1 1/4X2 5/8	6	0
40007	2-5/16 X 1 X 2-1/4	12	0
40008	BALL,HITCH,2.31X1.2	12	0
40009	2.31X1.25,2.75,20K	12	3
40010	PACKAGED 40093 SWAY	24	6
40015	1 7/8 X 3/4 X 2 1/8	12	0
40016	1 7/8 X 3/4 X 3 HIT	12	0
40017	1 7/8 X 1 X 3 HITCH	12	0
40018	2 X 3/4 X 2 1/8 HIT	12	0
40019	2 X 3/4 X 3 HITCH B	12	0
40020	2 X 1 X 3 HITCH BAL	12	0
40021	2 5/16 X 1 X 3 HITC	6	0
40022	2 5/16 X 1 1/4 X 3	6	0
40030	2-5/16 X 1-1/4 X 2-	6	0
40031	1 7/8 X1X2 3/16 X1	12	0
40032	1 7/8X1X2 1/8X2 HIT	12	0
40033	2 X 1 X 2 1/8 X 1 H	12	0
40034	2X1X2 1/8X2 HITCH B	12	0
40035	2 5/16X1 1/4X2 5/8	6	0
40036	2 5/16X1 1/4X2 5/8	6	0
40037	2 X 1 X 2 1/8 HITCH	12	0
40038	2 X 1 X 2 1/4 HITCH	12	0
40039	2 5/16 X 1 X 2 1/4	12	0
40042	2 5/16X1X2 1/4 HITC	12	0
40047	2" X 1" ROCKER BALL	3	0
40050	1 7/8X3/4 X2 1/8 HI	12	0
40051	1 7/8X1X2 1/8 HITCH	12	0
40052	2X3/4X2 1/8 HITCH B	12	0
40053	2 X 1 X 2 1/8 HITCH	12	0
40054	2 5/16X1X2 1/8 HITC	12	0
40055	2 5/16 X 1-1/4 HITC	9	0
40056	2 X 1-1/4 HITCH BAL	9	0
40061	1 7/8 X 3/4 X 1 5/8	12	3
40062	1 7/8 X 1 X 2 1/8 H	12	3
40063	1 7/8X3/4X2 1/8 HIT	12	3
40064	2 X 3/4 X 1 3/4 HIT	12	3
40065	2 X 3/4 X 2 1/8 HIT	12	3
40066	2 X 1 X 2 1/8 HITCH	12	3
40067	2 5/16 X 1 X 2 1/8	12	3
40068	2 5/16X1 1/4X2 5/8	12	3
40069	BALL,HITCH 2X1.25X2	12	3
40070	2 X 1 X 2 1/8 HITCH	12	3
40071	1 7/8 X 3/4 X 3 HIT	12	3
40072	1 7/8 X 1 X 3 HITCH	12	3
40073	2 X 3/4 X 3 HITCH B	12	3
40074	2 X 1 X 3 HITCH BAL	12	3
40075	2 5/16 X 1 X 3 HITC	12	3
40076	2 5/16 X 1 1/4 X 3	12	3
40078	2-5/16 X 1-1/4 X 2-	12	3
40080	1 7/8X3/4X2 1/8 HIT	12	3
40081	1 7/8X1X2 1/8 HITCH	12	3
40082	2X3/4X2 1/8 HITCH B	12	3

Part #	Description	MP	IP
40083	2X1X2 1/8 HITCH BAL	12	3
40084	2 5/16X1X2 1/8 HITC	12	3
40085	2-5/16 X 1-1/4 X 2-	6	0
40086	2-5/16 X 1"RISE X1-	6	0
40087	2 5/16 X 1 1/4 RAW	6	0
40088	2 5/16 X 2 X 3 1/2	6	0
40089	3 X 2 X 3 1/4 HITCH	6	0
40090	2 X 1 1/4 X 2 5/8 H	12	0
40093	SWAY CONTROL HITCH	50	0
40094	2 5/16 GOOSE NECK W	12	0
40095	1-7/8" ATV BALL, BU	12	0
40096	1-7/8" ATV BALL, PA	12	3
40097	2" ATV BALL, BULK	12	0
40098	2" ATV BALL, PACKAG	12	3
40099	50MM HITCH BALL, BU	12	0
40103	PKG 3/4 IN REPLACEM	100	0
40104	PKG 1 IN REPLACEMEN	8	0
40105	PKG 1 1/4 IN REPLAC	8	0
40161	1 7/8 X 3/4 X 1 5/8	12	3
40162	1 7/8 X 1 X 2 1/8 H	12	3
40164	2 X 3/4 X 1 3/4 HIT	12	3
40166	2 X 1 X 2 1/8 HITCH	12	3
40167	2 5/16 X 1 X 2 1/8	12	3
40168	2 5/16X1 1/4X2 5/8	12	0
40170	2X1X2 1/8 HITCH BAL	12	3
40178	2-5/16"X1-1/4"X2-5/	12	3
40190	2 X 1 1/4 X 2 5/8 H	12	3
40246	2" ROCKER BALL 3.5K	6	3
40247	2" ROCKER BALL 7.5K	6	3
40248	2 5/16X1 RCKR BALL	6	3
40249	2 5/16" RCKR BALL 1	6	3
41200	2 IN REPLACEMENT BA	1	0
41201	2 IN REPLACEMENT BA	50	0
41340	3/4 IN REPLACEMENT	1	0
41341	3/4 IN REPLACEMENT	1	0
41352	SHANK COVER FOR 3/4	1	0
41353	SHANK COVER FOR 3/4	1	0
41355	SHANK COVER FOR 1 I	1	0
41780	1 7/8 IN REPLACEMEN	1	0
41781	1 7/8 IN REPLACEMEN	1	0
41782	SWITCH BALL SET 3/4	6	0
42100	1 INCH REPLACEMENT	1	0
42103	1 IN REPLACEMENT SH	1	0
42178	1 IN SHANK WITH 1 7	6	0
42200	2 IN REPALCEMENT BA	1	0
42203	2 5/16 IN REPLACEME	1	0
42225	SWITCH BALL SET 1 I	6	0
42280	SWITCH BALL SET 1 I	6	0
42780	1 7/8 IN REPLACEMEN	1	0
42781	1 7/8 IN REPLACEMEN	1	0
45000	BALL MOUNT,4"R X 13	1	0
45001	BALL MOUNT,TRIBALL,	2	0
45002	BALL MOUNT,DBL BALL	2	0
45003	BALL MOUNT,VER SHAN	1	0
45005	BALL MOUNT,ATV,1.88	4	0
45006	ADAPTER,ATV RECEIVE	6	0
45007	ADAPTER,BALL MNT TO	25	0
45008	BALL MOUNT,ADJ DUAL	2	0
45009	BALL MOUNT,ATV,2.00	4	0
45010	STRAIGHT BALL MOUNT	1	0
45011	BALL MOUNT, PACKAGE	1	0
45012	PACKAGED BALL MOUNT	1	0
45013	ADAPTER,RECEIVER,VE	1	0
45014	BALL MOUNT 5 IN. RI	1	0
45015	BALL MOUNT 5 IN. RI	1	0
45016	BALL MOUNT 3.25 DRO	1	0
45017	BALL MOUNT 2 3/4 IN	1	0
45018	BALL MOUNT, 1 1/4"	1	0
45019	BALL MOUNT, 1 1/4"	1	0
45020	STRAIGHT BALL MOUNT	1	0
45021	BALL MOUNT,3 1/8 R,	1	0
45022	BALL MOUNT,3 3/4D,2	1	0
45023	BALL MOUNT, 4" R, 2	1	0

Part #	Description	MP	IP
45024	BALL MOUNT, 5" R, 2	1	0
45025	BALL MOUNT, 5" R, 2	1	0
45026	BALL MOUNT, 3.25."	1	0
45027	BALL MOUNT, 3.25" D	1	0
45028	BALL MOUNT 6 IN DRO	1	0
45029	BALL MOUNT,KIT 4500	4	0
45030	2 IN DROP BALL MOUN	1	0
45032	PACKAGED BALL MOUNT	1	0
45033	D-3 W/ PIN, CLIP AN	1	0
45034	2 IN DROP LOADED BA	1	0
45035	D-532 MASTER PACK O	1	0
45036	2 IN DROP LOADED BA	1	0
45037	2 IN DROP LOADED BA	3	0
45038	BALL MOUNT,KIT 4500	4	0
45040	2 IN X 3/4 IN X 10	1	0
45041	BALL MOUNT,2"D,7500	2	0
45042	BALL MOUNT,4"D,7500	2	0
45048	RECEIVER EXTENSION	1	0
45049	DUAL BALL & CLEVIS	1	0
45050	4X2X8 1/4 IN BALL M	1	0
45051	PKG 4 IN X 2 IN X 8	1	0
45052	PACKAGED BALL MOUNT	1	0
45055	4 IN DROP LOADED BA	1	0
45056	4 IN DROP LOADED BA	1	0
45057	MASTER PACK OF 3 D-	3	0
45059	SHANK,ADJ BALL & CL	1	0
45060	4 IN X 2 IN X 10 1/	1	0
45064	6" DROP LOADED W/ 2	2	0
45065	6" DROP LOADED W/ 2	2	0
45069	GARAGE STORAGE ORGA	4	0
45070	6 IN X 4 IN X 8 1/4	1	0
45080	6 IN X 4 IN X 12 1/	1	0
45090	8 IN X 6 IN X 8 1/4	1	0
45100	BALL MOUNT	1	0
45110	BALL MOUNT	1	0
45112	BALL MOUNT	1	0
45131	2" DROP WELDED BM 5	4	0
45134	2" DROP WELDED BM 7	2	0
45141	2" X 2" STARTER KIT	2	0
45142	2" X 2" STARTER KIT	2	0
45143	ROCKER BALL STARTER	2	0
45144	ROCKER BALL STARTER	2	0
45147	1-1/4" X 1-1/4" STA	6	0
45148	1 1/4" X 1 1/4" STA	6	0
45149	PRELOADED SWAY TAB	2	0
45151	4" DROP WELDED BM 5	4	0
45152	2" RISE WELDED BM 5	4	0
45154	4" DROP WELDED BM 7	2	0
45155	2" RISE WELDED BM 7	4	0
45190	RV TOWING STARTER K	1	0
45220	2 IN DROP W/8 1/4 I	1	0
45230	4 IN DROP W/8 1/4 I	1	0
45240	6 IN DROP W/8 1/4 I	1	0
45250	STRAIGHT BALL MOUNT	1	0
45260	2 IN X 3/4 IN X 12	1	0
45270	4 IN X 2 IN X 12 1/	1	0
45280	BALL MOUNT,6"X4"X14	1	0
45290	7500 GWT 2 IN DROP	2	0
45293	2" DROP CHROME BALL	2	0
45295	2" DROP CHROME BALL	2	0
45296	7500 GWT - 4 IN DRO	2	0
45297	7500 GWT 6 IN DROP	2	0
45310	BALL MOUNT 2" DROP	1	0
45311	BALL MOUNT 4" DROP	1	0
45312	BALL MOUNT 2" DROP	1	0
45313	BALL MOUNT 4" DROP	1	0
45331	BALL MOUNT,FORGED,2	1	0
45332	BALL MOUNT,FORGED,4	1	0
45336	BALL MOUNT, 10000 L	1	0
45338	BALL MOUNT, 10000 L	1	0
45340	FORGED BALL MOUNT 1	3	0
45341	FORGED BALL MOUNT 1	4	0
45342	FORGED BALL MOUNT 1	3	0

Part #	Description	MP	IP
45360	ALUMINUM BM - 2" DR	2	0
45361	ALUMINUM BM - 4" DR	2	0
45362	ALUMINUM BM - 6" DR	2	0
45370	FORGED BM 2" REC, 6	1	0
45371	FORGED BM 2.5" REC	1	0
45372	FORGED BM 2.5" REC	1	0
45373	FORGED BM 2.5" REC	1	0
45374	FORGED BM 2.5" REC	1	0
45375	FORGED BM 3" REC 4"	1	0
45376	FORGED BM 3" REC 6"	1	0
45377	FORGED BM 3" REC 8"	1	0
45405	BALL MOUNT REDUCER	6	0
45408	REDUCER SLEEVE SET	9	0
45409	REDUCER SLEEVE 3" T	6	0
45430	FORGED BALL MOUNT 2	1	0
45431	FORGED BALL MOUNT 2	1	0
45432	FORGED BALL MOUNT 2	1	0
45446	BALL MOUNT, 12000 L	1	0
45448	BALL MOUNT, 12000 L	1	0
45456	FORGED BALL MOUNT 2	3	0
45458	FORGED BALL MOUNT 2	4	0
45459	FORGED BALL MOUNT 2	1	0
45460	FORGED BALL MOUNT 2	1	0
45500	HOOK,TOW,FORGED RCV	4	0
45503	BALL MOUNT,1.0"D,.3	1	0
45507	VERTICAL MOUNT BALL	1	0
45510	CLASS I BALLMOUNT	1	0
45518	1 1/4 IN DROP W/ 6	1	0
45519	1 1/4 IN DROP W/ 9	1	0
45520	12 IN CLASS I & II	4	0
45521	3 1/4 DROP W/ 7 1/8	6	0
45522	3 1/8 IN RISE X 14	1	0
45534	TOWING STARTER KIT,	1	0
45551	BALL MOUNT,EURO,.75	1	0
45552	BALL MOUNT,EURO,.75	1	0
45554	TOWING STARTER KIT,	1	0
45561	BALL MOUNT,EURO,3.1	1	0
45562	BALL MOUNT,EURO,3.1	1	0
45571	BALL MOUNT,EURO,2.6	1	0
45572	BALL MOUNT,EURO,2.6	1	0
45581	BALL MOUNT,EURO,3.2	1	0
45582	BALL MOUNT,EURO,3.2	1	0
45591	BALL MOUNT,EURO,3.1	1	0
45592	BALL MOUNT,EURO,3.1	1	0
45650	TRIPLE TOW BAR 1 7/	1	0
45651	TRIPLE TOW BAR 2.5"	2	0
45652	TRIPLE TOW BAR 1-7/	2	0
45655	TRIPLE TOW BAR 1 7/	1	0
45660	DOUBLE TOW BAR 2 IN	1	0
45665	DOUBLE TOW BAR 2 IN	1	0
45675	TRIBALL W/HOOK 1-7/	1	0
45770	ADAPTABLE HITCH EXT	1	0
45775	ADAPTABLE HITCH EXT	1	0
45781	2" HITCH EXTENDER 8	1	0
45785	RECEIVER TUBE ADAPT	4	0
45789	RECEIVER TUBE EXTEN	1	0
45790	ADAPTABLE HITCH EXT	1	0
45791	ADAPTABLE HITCH EXT	100	0
45792	MULTI-USE RECEIVER	1	0
45794	ADAPTER,RECEIVER TU	1	0
45795	ADAPTABLE HITCH EXT	1	0
45796	ADAPTABLE HITCH EXT	100	0
45797	2' RISE/DROP RECEIV	1	0
45798	4" RISE/DROP RECEIV	1	0
45799	ADJUSTABLE MULTI-BA	1	0
45800	BALL MOUNT,MB,ADJ,R	2	0
45801	SHANK,D-900 REPLACE	1	0
45802	REPL ADJ TUBE MNT,	4	0
45803	1" CLEVIS PIN	20	0
45804	5/8" CLEVIS PIN	20	0
45805	1/2" CLEVIS PIN	20	0
45806	SAFETY CHAIN HOLDER	6	0

MP = MASTER PACK / **IP** = INNER PACK

Part #	Description	MP	IP
45807	STEEL SAFETY CHAIN	1	0
45808	6" RISE/DROP RECEIV	1	0
45810	MULTI-USE BALLMOUNT	1	0
45812	ADJUSTABLE BALL MOU	4	0
45820	SWAY CONTROL BALLMO	1	0
45821	CLEVIS PIN BALL MOU	4	0
45822	MOUNT,WELD ON SWAY	1	0
45825	MOUNT,TOW HOOK,CHRO	2	0
45831	TOW HOOK MOUNT 2-1/	1	0
45832	TOW HOOK MOUNT 2"	1	0
45900	BALL MOUNT,FORGED,D	1	0
45901	BALL MOUNT,FORGED,D	1	0
45902	BALL MOUNT,FR,DL 2/	1	0
45903	SLIM BM FORGED DUAL	1	0
45904	ADJ FORGED BM WITH	45	0
45907	13K CHANNEL MOUNT W	1	0
45908	20K CHANNEL MOUNT W	1	0
45909	CHANNEL MOUNT STEP	1	0
45910	SHANK,BM,FORGED,REP	1	0
45911	SHANK,BM,ADJ,REPL 4	1	0
45912	BALL,ADJ DUAL,REPL	1	0
45916	ANTI-RATTLE SET SCR	1	0
45917	SHANK,BM,FRG,REPL 4	1	0
45919	PINTLE,COMBO,ADJUST	1	0
45920	PINTLE,COMBO,ADJUST	1	0
45921	ANTI-RATTLE RUBBER	50	0
45922	PINTLE,COMBO,ADJ,2.	1	0
45923	BALL,ADJ DUAL,REPL	1	0
45924	BALL, ADJ DUAL, REP	1	0
45925	ONE MNT PIN&CLIP RP	1	0
45926	2" DEEP DROP FORGED	1	0
45927	2.5" DEEP DROP FORG	1	0
45928	3" DEEP DROP FORGED	1	0
45931	WD DUAL BALL REPL P	25	0
45932	RXD KEYED ALIKE LOC	12	3
45933	DUAL BALL WD SHANK	1	1
45934	HD DUALL BALL WD SH	1	1
45935	2" WD ADJ MOUNT DUA	1	1
45936	2" DEEP DROP WD ADJ	1	1
45937	2.5" HD WD ADJ MOUN	1	1
45938	REB XD TONGUE LOCK	12	3
45939	2.5" DEEP DROP HD W	1	1
45940	RXD REPLACEMENT TON	4	0
45950	RXD PINTLE MOUNT AC	4	0
45951	REBELLION XD W/ DUA	1	1
45952	REBELLION XD DUAL B	3	0
45953	REBELLION XD DUAL B	4	0
45955	REBELLION XD BALL M	1	0
45959	REBELLION XD REPLAC	25	0
45960	REBELLION XD REPLAC	50	0
48004	PINTLE,RCVR MNT,10	1	0
48005	PINTLE,RCVR MNT,5 T	1	0
48006	PINTLE,COMB,RCVR MN	1	0
48007	PINTLE,COMB,RCVR MN	1	0
48010	2.5" REC MOUNT PINT	1	0
48011	2" ADJUSTABLE SHANK	1	0
48012	2.5" REC MNT PINTLE	1	0
48016	2-1/2" ADJUSTABLE S	1	0
48180	1 7/8 IN BALL & PIN	4	0
48190	2 IN BALL & PINTLE	4	0
48200	8 TON COMBO BALL &	4	0
48205	5 TON GTW - REGULAR	4	0
48210	10 TON GTW - REGULA	4	0
48215	15 TON GTW - REGULA	4	0
48231	30 TON GTW - REGULA	1	0
48323	7 IN PLATE 8 1/2 IN	2	0
48324	7 IN PLATE 10 1/2 I	2	0
48325	10 1/2" ADJUSTABLE	1	0
48326	8 1/2" PINTLE MOUNT	1	0
48327	10 1/2" PINTLE MOUN	1	0
48328	8 1/2" ADJUSTABLE P	1	0
48329	2.5" ADJUSTABLE PIN	2	0
48332	BOLT KIT FOR PINTLE	1	0

Part #	Description	MP	IP
48333	48330 PACKAGED BOLT	6	0
48334	REPL BOLT KIT FOR P	1	0
48340	2.5" PINTLE MOUNT	1	0
48341	13 IN PLATE 12 1/2	2	0
48342	13 IN PLATE 14 1/2	1	0
48343	2" PINTLE MOUNT, 17	1	0
48348	2.5" FORGED PINTLE	1	0
48349	2.5" FORGED PINTLE	1	0
48405	7 TON PINTLE HOOK W	1	0
48406	7 TON COMBO BALL 2-	1	0
48407	7 TON COMBO BALL RI	1	0
48410	10 TON COMBO BALL 2	1	1
48411	10 TON COMBO BALL 2	1	1
48420	2" REPL BALL RING C	9	0
48430	2-5/16" REPL BALL R	1	0
48505	15 TON PINTLE HOOK	1	1
48510	22000 GTW - ALLOY S	1	0
48520	15000 GTW - ALLOY S	1	0
48530	45000 GTW - ALLOY S	1	0
48549	ADJ SLIDE PINTLE RE	1	0
48550	35000 GTW - ALLOY S	3	0
48551	REPL SAFTY CHAIN HO	1	0
48552	REPL HARWARE CHANNE	1	0
48553	60K HARDWARE 48560	1	0
48560	60000 GTW - FORGED	3	0
48600	12000 GTW - 3 IN AD	1	0
48601	12000 GTW - 3 IN AD	1	0
48610	3 POSITION CHANNEL	1	0
48620	E-62 BOLT KIT,FOR E	1	0
48621	48620 PACKAGED BOLT	6	0
48625	12.5 TON LUNNETTE E	1	1
48626	20 TON LUNNETTE EYE	1	1
48630	3 IN ID EYE KIT W/3	1	0
48631	3 IN ID EYE KIT W/3	1	0
48640	3 IN ID EYE KIT W/5	1	0
48641	KIT 20T LUNETTE W L	1	1
48650	5 POSITION CHANNEL	1	0
48651	SECURE LATCH CHANNE	280	0
48660	12 TON FORGED 3 IN	350	0
48661	30 TON LUNNETTE 4 H	1	1
48810	1 7/8 IN REPLACEMEN	1	0
48820	2 IN REPLACEMENT BA	1	0
48830	2 5/16 IN REPLACEME	1	0
49060	6 IN RECEIVER TUBE	1	0
49090	9 IN RECEIVER TUBE	1	0
49120	12 IN RECEIVER TUBE	1	0
49180	18 IN RECEIVER TUBE	1	0
49240	24 IN RECEIVER TUBE	1	0
49360	36 IN RECEIVER TUBE	1	0
49480	48 IN RECEIVER TUBE	1	0
49506	6 IN RECEIVER TUBE	1	0
49510	2.5" RECEIVER TUBE	1	0
49511	2.5" RECEIVER TUBE	1	0
49512	12 IN RECEIVER TUBE	1	0
49513	3" RECEIVER TUBE 12	4	0
49515	3" RECEIVER TUBE 18	2	0
49516	2.5" RECEIVER TUBE	1	0
49517	3" RECEIVER 12" LEN	4	0
49518	3" RECEIVER 18" LEN	2	0
49524	24 IN RECEIVER TUBE	1	0
49529	10 IN SOLID STEEL H	1	0
49530	12 IN SOLID STEEL H	1	0
49531	14 IN SOLID STEEL H	1	0
49533	18 IN SOLID STEEL H	1	0
49536	24 IN SOLID STEEL H	1	0
49537	8 IN SOLID STEEL HI	1	0
49717	WELD ON HITCH BOX 5	1	0
49770	3 IN X 3 IN X 1 IN	1	0
49950	10000 LB WELD-ON SA	1	0
51110	BRK CNTRLR,VENTURER	12	0
51114	MOUNTING BRACKET, C	100	0
51116	BRK CNTRLR, VENTURE	36	0
51120	BRK CNTRLR,DISCOVER	12	0

Part #	Description	MP	IP
51122	BRK CNTRLR,DISCOVER	1	0
51124	KIT,REPLACE BRK HDW	12	0
51125	MOUNTING BRACKET, C	100	0
51126	BRK CNTRL, DISCOVER	36	0
51140	BRK CNTRLR,TRIFLEX,	10	0
51142	BRK CNTRLR,TRIFLEX,	1	0
51144	KIT,REPLACE BRK HDW	12	0
51146	BRK CNTRL, TRIFLEX	1	0
51160	BRAKE CONTROLLER -	10	0
51170	SPECTRUM - BRAKE CO	12	0
51180	ECHO MOBILE BRAKE C	6	0
51186	ECHO SAFETY STRAP	1	0
51189	ECHO MANUAL OVERRID	27	0
51190	ECHO UNDERDASH BRAK	18	0
51200	ECHO-INLINE BRAKE C	4	0
51420	BRAKE CONTROL HARNE	50	0
51421	BRAKE CONTROL HARNE	1	0
51431	BRAKE CONTROL HARNE	1	0
51444	HARN,BK CTRL,JEEP G	1	0
51498	TEST BOX, 7 WAY FUN	1	0
51500	KIT,BRK CNTRL WIRIN	1	0
51515	HARN,BK CTRL,QP W/P	1	0
51516	HARN,BK CTRL,QP W/P	36	0
51520	HARN,BRK CTRL,D-T T	36	0
51521	TEST BOX, BRAKE CON	1	0
51531	MERCEDES, SPRINTER	50	0
51532	BRK CNTR ADAPTER TK	36	0
52010	NYLON BREAKAWAY SWI	120	60
52011	NYLON BREAKAWAY SWI	15	0
52020	REPLACEMENT LANYARD	600	300
52021	PACKAGED LANYARD WI	24	6
52022	CURT BATTERY BOX	40	0
52023	CURT 12V 5.4 AMP RE	10	0
52025	CURT 12V BATTERY CH	100	0
52026	CURT SOFTTRAC II BR	1	0
52027	CURT BATTERY CASE	60	0
52028	CURT SOFTTRAC II BR	1	0
52029	CURT BATTERY BOX	40	0
52030	CURT BATTERY BOX	40	0
52040	CURT SOFTTRAC I BRE	4	0
52041	CURT SOFTTRAC I BRE	4	0
52042	BREAKAWAY KIT,PUSH	4	0
52044	BREAKAWAY KIT,PUSH	4	0
52090	CURT BATTERY BOX	30	0
53200	TOWING LIGHTS, 20',	10	0
53201	LED CARGO LIGHTS	30	0
53204	4-WAY FLAT MAGNETIC	1	0
53440	RED COMBINATION LIG	1	0
53441	RED COMBINATION LIG	1	0
53445	RED REAR REPLACEMEN	1	0
53452	RED SUBMERSIBLE COM	1	0
53453	RED SUBMERSIBLE COM	1	0
53515	RED SIDE REPLACEMEN	1	0
53540	STOP TAIL AND SIDE	1	0
55151	WIRING KIT, T-CONN,	1	0
55152	WIRING KIT. T-CONN,	1	0
55177	3 WIRE TO 2 WIRE CO	1	0
55178	3 TO 2 CONVERTER PA	36	6
55179	4 FLAT 3 TO 2 CONVE	72	6
55417	2020 GM 7-WAY ADAPT	10	0
56080	EXTENSION,5TH WHEEL	12	0
56130	CONVERTER,BASIC,PAC	18	0
56175	CONVERTER,CP,PACKAG	18	0
56187	CONVERTER,BASIC,PWR	18	0
56190	CONVERTER,HD W/SMAR	18	0
56196	CONVERTER,2-WIRE TO	18	0
56236	CONVERTER,MULTI-FUN	18	0
56424	BOARD, CONVERTER 24	18	0
56476	4-FLAT TRAILER END	12	0
56496	POTTED TAILLIGHT CO	18	0
56497	56496 30 PACK	18	0
56601	7 WAY MOLDED TRLR E	12	0
56602	7 WAY MOLDED TRLR E	12	0

Part #	Description	MP	IP
56603	7 WAY MOLDED TRLR E	12	0
56611	7 WAY COLD WEATHER	12	0
56612	7 WAY COLD WEATHER	12	0
56613	7 WAY COLD WEATHER	12	0
56621	7 WAY MOLDED TRLR E	4	0
56622	7 WAY MOLDED TRLR E	4	0
56623	7 WAY MOLDED TRLR E	4	0
57001	WIRE, 16-4, WT/BN/Y	20	0
57003	VW 7-WAY ADAPTOR	5	0
57004	ADAPTOR,7 TO 4/5,LE	36	0
57005	ADAPTOR,7 TO 6,LED	36	0
57007	KIT,7-WAY EXT, ISOL	50	0
57015	SAE 7/4 SOCKET - BU	50	0
57016	SAE 7/4 BRACKET WIT	1	0
57020	SAE 7/4 SOCKET - RE	24	0
57040	7-POLE ROUND TO 4 F	150	75
57041	7-POLE ROUND TO 4 F	80	10
57100	SOCKET,MFUNC,7WBLD,	5	0
57102	SOCKET,MFUNC,7WBLD,	5	0
57183	4-WAY FLAT TO 6-WAY	48	6
57184	4-WAY FLAT TO 7-WAY	48	6
57185	4-WAY FLAT TO 7-WAY	1	0
57186	4-FLAT TO 7-WAY W/B	5	0
57187	5-WAY FLAT TO 4-WAY	6	0
57201	BRKT,MNT,7WAY,UNV,L	1	0
57202	MOUNTING BRKT,LONG	72	0
57203	BRKT,MNT,7WAY,UNV,S	6	0
57204	MOUNTING BRKT,SHORT	72	0
57205	BRKT,MNT,7WAY,HD,12	6	0
57206	BRKT,MNT,7WAY,HD,PK	72	12
57207	BRKT,MNT,456 WAY RN	1	0
57208	BRKT,MNT,456 WAY RN	1	0
57220	I-420 4-FLAT 20' TR	36	6
57224	4 POLE ROUND TO 4 F	400	200
57225	4 POLE ROUND TO 4 F	24	6
57240	7-WAY RV ROUND TO 4	180	90
57241	7-WAY RV ROUND TO 4	80	10
57245	7 TO 4 W/LED DUST C	36	0
57250	7-WAY RV (FLAT CONN	150	75
57251	7-WAY RV (FLAT CONN	80	10
57255	7 TO 6 AUX W/LED DU	36	0
57260	7-WAY RV ROUND TO 6	160	80
57261	7-WAY RV STYLE (FLA	80	10
57265	7 TO 6 BRAKE W/LED	16	0
57271	7-WAY TO 4-WAY 7506	12	0
57280	RV 7 TO 4-FLAT COIL	12	0
57281	7-WAY ADAPTOR 75065	12	0
57282	RV 7 TO 5-FLAT COIL	5	0
57283	RV 7 TO 6 COILED AD	10	5
57284	RV 7 TO 7 COILED AD	10	5
57285	RV 7 TO 4 RND COILE	10	5
57286	RV 6 TO 6 COILED AD	10	5
57404	4 FLAT TO 4 FLAT 1.	24	6
57405	4-FLAT TO 4-FLAT 1.	24	6
57444	4 WAY ROUND TO 4 WA	150	75
57505	12 VOLT CIRCUIT TES	300	150
57604	4-WAY FLAT TO BOTH	36	6
57620	6-WAY ROUND TO 4-WA	400	200
57621	6-WAY ROUND TO 4-WA	24	6
57624	4 WAY FLAT TO BOTH	36	6
57626	6 WAY ROUND TO 4 WA	36	6
57627	6 TO 4 W/LED DUST C	1	0
57660	7-WAY RV TO 6 ROUND	160	80
57661	7-WAY RV TO 6 ROUND	80	10
57667	6-WAY ROUND TO 7-WA	36	6
57672	4 WAY FLAT TO BOTH	24	6
57674	4 WAY FLAT TO BOTH	24	6
57676	7 WAY ROUND TO 4 WA	24	6
57720	7 TO 6 ADPTR W/BKUP	48	6
57724	7 TO 4 ADPTR W/BKUP	36	6
57725	7 TO 5 ADPTR W/BKUP	36	6
57726	7 TO 6 ADPTR W/BKUP	48	6

MP = MASTER PACK / **IP** = INNER PACK

Part #	Description	MP	IP
57727	7 TO 7 ADPTR W/BKUP	48	6
58000	BRACKET,ELEC,7WAY/4	20	0
58001	BRACKET,ELEC,4FLAT	20	0
58002	BRACKET,ELEC,4FLAT	20	0
58003	BRACKET,ELEC,7WAY/4	20	0
58020	2-FLAT LOOP 12 IN B	400	0
58021	2-FLAT LOOP 12 IN P	200	100
58030	4 WAY FLAT 12 IN TR	600	300
58031	4 WAY FLAT 12 IN TR	200	100
58032	4 WAY FLAT 48" BULK	1	0
58033	I-3 4-FLAT TRAILER	1	0
58034	6 WAY SQUARE W/12"	36	0
58035	6 WAY SQUARE CAR EN	1	0
58037	6 WAY SQUARE TRLR E	1	0
58040	4 WAY FLAT 60 IN CA	200	100
58041	4 WAY FLAT 60 IN CA	24	6
58042	4 WAY FLAT 48" BULK	1	0
58044	I-4 4-FLAT CAR END	24	6
58050	4 WAY BONDED 72 IN	150	75
58051	4-WAY BONDED 72 IN	80	10
58060	4 POLE DIE CAST CON	300	150
58061	PKGD-4-WAY DIE CAST	24	6
58070	4 POLE DIE CAST CON	100	50
58071	PKGD-7-WAY DIE CAST	80	10
58080	6 POLE DIE CAST CON	300	150
58081	6 POLE DIE CAST CON	24	6
58082	6-POLE DIE CAST CON	1	0
58083	CONN,6-POLE DIECAST	48	6
58090	6 POLE DIE CAST CON	140	70
58091	6 POLE DIE CAST CON	80	10
58092	I-8/I-9 6-POLE DIE	100	50
58093	I-8/I-9/I-21 6-POLE	48	6
58120	6 POLE PL CONN, TRA	200	100
58130	6-POLE CONNECTOR, C	200	150
58140	7 POLE PLASTIC CONN	200	100
58141	7 POLE PLASTIC CONN	80	10
58145	HD 7-WAY TRAILER-SI	80	10
58150	7 POLE PLASTIC CONN	150	75
58151	7-POLE PLASTIC CONN	48	6
58152	PKG I-14/I-15/I-51	48	6
58155	HD 7-WAY RV-STYLE 7	48	6
58160	7-POLE DIE-CAST CON	60	30
58161	CONN,7-POLE DIECAST	8	6
58170	7-POLE DIE-CAST CON	50	25
58180	7-POLE DIE CAST CON	20	0
58181	CONN,7-POLE DIECAST	48	6
58190	7-POLE METAL CONNEC	120	60
58200	4-FLAT CAP,CARSIDE	200	0
58201	4-FLAT CAP,CARSIDE,	24	0
58202	COVER, 5-FLAT, CARS	500	0
58203	COVER, 5-FLAT, CARS	24	0
58210	BRACKET FOR CONNECT	1	0
58220	7-POLE METAL CONNEC	100	50
58222	BRACKET FOR CONNECT	1	0
58230	BRACKET FOR CONNECT	200	0
58231	BRACKET FOR CONNECT	100	0
58240	TAIL LIGHT CONVERTE	150	75
58260	LED 4-FLAT TESTER	1000	0
58261	LED 4-FLAT TESTER,P	60	0
58267	NEW 2" GM TAILGATE	4	0
58270	12V 7-WAY RV ROUND	150	75
58271	12V 7-WAY RV ROUND	36	6
58272	7-WAY LED RV BLADE	150	0
58273	7-WAY LED RV BLADE	18	0
58280	14-18 GAUGE WIRE CO	1	0
58290	BLACK BRACKET FOR C	200	0
58291	PKG BLACK ZINC CONN	100	0
58300	BRACKET,4-FLAT,BULK	200	0
58301	BRACKET,4-FLAT,PKGD	150	0
58303	BRACKET, 5-WAY FLAT	24	6
58304	12 CAR END/12 TRAIL	24	6
58305	48 CAR END/12 TRAIL	24	6
58310	FLASHES 1-4 32 CP T	500	0

Part #	Description	MP	IP
58320	FLASHES 2-3 32 CP T	250	0
58340	15 AMP UNIVERSAL CI	1	0
58341	15 AMP CIRCUIT BREA	216	12
58344	12 CAR END/12 TRAIL	24	6
58345	4-FLAT CAR END 60",	24	6
58348	48 TRAILER END	24	6
58349	48 TRAILER END KIT	24	6
58351	20 AMP CIRCUIT BREA	216	12
58361	30 AMP CIRCUIT BREA	216	12
58371	40 AMP CIRCUIT BREA	216	12
58380	4-WAY BONDED 12 BON	300	150
58381	4-WAY BONDED 12 BON	24	6
58390	PULL WIRE 3/8 IN	1	0
58400	PULL WIRE 1/2 IN	1	0
58404	4 FLAT TO 4 FLAT 1.	300	150
58405	4-FLAT TO 4-FLAT 1.	200	100
58406	4-FLAT TO 4-FLAT 1.	150	75
58410	PULL WIRE 7/16 IN	1	0
58414	4 WAY ROUND TO 4 WA	300	150
58417	7 WAY RV SOCKET WIT	48	6
58430	PULL WIRE 5/8 IN	1	0
58440	FUSE,10 AMP ATC,BUL	1	0
58450	FUSE,15 AMP ATC,BUL	1	0
58460	FUSE,20 AMP ATC,BUL	1	0
58470	HOLDER, IN-LINE FUS	25	0
58510	BRACKET FOR I-15/I-	100	0
58520	BRACKET,U.S. CAR 7	200	0
58530	5-FLAT CAR END 60 I	120	60
58531	5-FLAT CAR END 60 I	80	10
58540	5-FLAT TRAILER END	120	60
58541	5-FLAT TRAILER END	80	10
58545	5-FLAT CAR END 60",	80	10
58550	5-FLAT LOOP 72 IN B	100	50
58551	5-FLAT LOOP 72 IN P	80	10
58650	12 VOLT CIRCUIT TES	250	125
58671	I-6/I-7, 4 POLE DIE	80	10
58677	I-6/I-7/I-21 PKG.	48	6
58750	DUST COVER TRAILER	1200	600
58761	DUST COVER SET	200	100
58823	1/4 IN CONVOLUTED S	1	0
58918	RV HARNESS, 4 FLAT	1	0
58919	RV HARNESS, NPWR CO	1	0
58920	RV HARNESS, PWR CON	12	0
58979	RV, SPLICE IN HARNE	1	0
58980	RV HARNESS - 7 WAY	1	0
58981	RV HARNESS - 6 WAY	1	0
58999	BAG, KIT, RV HARNES	18	0
59187	CONVERTER,BASIC,PWR	1	0
59190	CONVERTER,HD,PWRKIT	1	0
59236	CONVERTER,MULTI-FUN	12	0
59421	22-18 G BUTT CONNEC	1	0
59422	16-14 G BUTT CONNEC	1	0
59423	12-10 G BUTT CONNEC	1	0
59432	16-14 G MALE QUICK	1	0
59433	12-10 G MALE QUICK	1	0
59496	POTTED CONVERTER W/	36	0
59521	16-14 G 10 RING TER	1	0
59522	16-14 G 1/4 IN RING	1	0
59523	16-14 G 3/8 IN RING	1	0
59525	16-14 G 5/16 IN RIN	1	0
59531	12-10 G 10 RING TER	1	0
59534	12-10 G 1/4 IN RING	1	0
59538	12-10 G 3/8 IN RING	1	0
59556	12-10 G 5/16 IN RIN	1	0
59592	16-14 G FEMALE QUIC	1	0
59593	12-10 G FEMALE QUIC	1	0
59611	22-18 G SPADE TERMI	1	0
59621	16-14 G SPADE TERMI	1	0
59631	12-10 G SPADE TERMI	1	0
59728	7 1/4 IN NYLON WIRE	1	0
59732	14 1/4 IN NYLON WIR	1	0
59740	3/4 IN X 60 FT 10 P	1	0
59824	3/8 IN CONVOLUTED S	1	0

Part #	Description	MP	IP
59825	3/8 X 25 FT SLIT LO	20	0
59826	1/2 IN BLACK CONVOL	1	0
59827	1/2 X 25 IN SLIT LO	20	0
59828	3/8 IN ID NYLON LOO	1	0
59901	WIRE NUTS - 100 PER	1	0
59905	12-10 GAUGE QUICK S	1	0
59906	14-18 GAUGE QUICK S	1	0
59956	18-14 GAUGE TAP CON	1	0
60601	60601 OE GOOSEBALL	8	1
60602	ROUND SHANK BALL EX	1	0
60603	ROUND SHANK HIGH RI	1	0
60616	600 SERIES REPLACEM	5	0
60627	2-5/16" OE GOOSEBAL	8	0
60628	3" OE GOOSEBALL 30K	4	0
60629	2-5/16" OE GOOSEBAL	8	0
60634	3" OE GOOSEBALL 38K	4	0
60646	SUB-KIT, FORD SUPER	1	0
60654	2-5/16" ROCKERBALL,	1	0
60910	GOOSENECK ISOLATOR	1	0
66112	QUICK GOOSE CHROME	1	0
66113	SAFETY CHAIN U-BOLT	1	0
66123	T-HANDLE WITH COTTE	1	0
66127	CHROME PLATED STEEL	1	0
66145	RUBBER COVER FOR QU	1	0
66150	INSTALLATION TEMPLA	1	0
66155	REPLACEMENT CAP FOR	500	0
66165	REPLACEMENT CAP FOR	500	0
70001	7500 LB STEEL TOW B	1	0
70002	BASE PLATE INSERT T	10	0
70003	BASE PLATE INSERT T	10	0
70004	TOWING ACCESSORIES	4	0
70005	KEYED ALIKE LOCKS 5	12	3
70006	TOW BAR SAFETY CABL	10	0
70007	TOW BAR SAFETY CABL	10	0
70008	TOW BAR SAFETY CABL	12	0
70010	RAMBLER TOWBAR COVE	10	0
80010	3/16 X 41 GRD 30 PL	1	0
80011	PKG 3/16 X 41 GRD30	8	0
80020	3/16 X 24 GRD 30 PL	1	0
80030	1/4 X 40 GRD 30 PLU	1	0
80031	PKG 1/4 X 40 GRD30	8	0
80040	1/4 X 23 GRD 30 PLU	1	0
80136	CABLE, TRAILER SAFE	40	2
80151	CABLE, TRAILER SAFE	30	2
80176	CABLE, TRAILER SAFE	20	2
80300	8/O X 23 GRD 30 PLU	1	0
80301	8/O X 40 GRD 30 PLU	1	0
80302	1/4 X 33 GRD 43 PLU	1	0
80303	1/4 X 32 GRD 70 PLU	1	0
80304	5/16 X 32 GRD 70 PL	10	0
80305	5/16 X 162 GRD70 PL	1	0
80306	5/16 X 186 GRD 70 P	1	0
80307	5/16 X 234 GRD 70 P	1	0
80308	5/16 X 294 GRD 70 P	1	0
80309	3/8 X 162 GRD 70 PL	1	0
80310	3/8 X 186 GRD 70 PL	1	0
80311	3/8 X 234 GRD 70 PL	1	0
80312	3/16 X 24 GRD30 PLU	1	0
80313	1/4 X 24 GRD 30 PLU	1	0
80314	5/16 X 32 GRD 43 PL	1	0
80315	3/8 X 31 GRD 43 PLU	1	0
80316	3/8 X 31 GRD 70 PLU	1	0
81260	3/8IN CERTIFIED S-H	1500	0
81261	3/8 IN HOOK WITH SA	1	0
81266	3/8 IN S-HOOK WITH	1250	0
81270	7/16 IN CERTIFIED S	1	0
81271	CLASS 2 3500 GVWR W	1	0
81277	7/16 IN S-HOOK WITH	1	0
81281	CLASS 3 5000 GVWR W	1	0
81288	9/16 IN S-HOOK WITH	40	0
81330	1/4 IN CLEVIS GRAB	1	0
81340	5/16 IN CLEVIS GRAB	1	0
81350	3/8 IN CLEVIS GRAB	1	0

Part #	Description	MP	IP
81360	SNAP HOOK WITH 5/8	1	0
81438	3/8 IN CLEVIS GRAB	1	0
81502	1/4 IN CLEVIS GRAB	1	0
81503	5/16 IN CLEVIS GRAB	1	0
81550	5/16 IN CLEVIS SAFE	1	0
81560	3/8 IN SAFETY HOOK	1	0
81620	17/32 IN CERTIFIED	1	0
81640	13/32 IN S-HOOK 350	1	0
81810	3/8" S-HOOK W/WIRE	500	0
81820	7/16" S-HOOK W/WIRE	1	0
81830	17/32" S-HOOK W/WIR	1	0
81840	13/32" S HOOK WITH	1	0
81900	1/4 IN CLEVIS SAFET	1	0
81910	1/2 IN SAFETY HOOK	1	0
81920	5/8 IN SFTY HK W/LA	1	0
81940	1/4 IN CLEVIS SAFET	1	0
81950	5/16 IN SAFETY HOOK	1	0
81960	3/8 IN SAFETY HOOK	1	0
81970	7/16 IN CLEVIS SAFE	1	0
81980	1/2 IN CLEVIS SAFET	1	0
81999	YELLOW ZINC LATCH K	1	0
82610	1/4 IN THREADED LIN	100	0
82611	1/4 IN THREADED LIN	1	0
82900	5/16 IN THREADED LI	300	0
82901	5/16 IN THREADED LI	100	0
82903	5/16" QUICK LINK 2	100	0
82930	3/8 IN THREADED LIN	25	0
82931	7/16 IN THREADED LI	1	0
82932	1/2 IN THREADED LIN	120	0
82933	3/8 IN THD LINK 220	1	0
82934	2640LB THREADED LIN	6	0
82935	3300 LB THREADED LI	6	0
82940	9/O JOINING LINK RA	100	0
82942	7/16 IN JOINING LIN	100	0
82944	7/16 IN JOINING LIN	100	0
83001	RATCHET, 1" X 10',	1	0
83002	RATCHET, 1" X 16',	1	0
83009	RATCHET, 1" X 10',	1	0
83010	RATCHET, 1" X 16',	1	0
83015	CAM TIE DOWN, 1" X	1	0
83016	CAM TIE DOWN, 1" X	1	0
83019	RATCHET, 1" X 16',	1	0
83020	RATCHET, 1" X 16',	1	0
83025	RATCHET, 1-1/16" X	1	0
83026	RATCHET, 1-1/16" X	1	0
83027	RATCHET, 1-1/16" X	1	0
83028	RATCHET, 1-1/16" X	1	0
83036	RATCHET, 1-1/2" X 1	1	0
83047	RATCHET, 2" X 27',	1	0
83048	RATCHET, 2" X 27',	1	0
83050	2 IN X 27 FT RATCHE	1	0
83060	HIDE-A-TIE ROPE HOO	1	0
83061	HIDE-A-TIE ROPE HOO	1	0
83066	2 IN X 30 FT VEHICL	1	0
83072	WELD ON ANCHOR 1 5/	2500	0
83600	5000 GTW RECESSED F	100	0
83601	1200 GTW FOR USE WI	14	0
83607	BACKING PLATE FOR J	50	0
83610	ROUND RECESSED WALL	1	0
83710	1000 LB CAPACITY 1/	100	0
83720	BLACK PLASTIC TRIM	1	0
83730	1200 LB CAP 10 GA S	500	0
83731	1,200 LB CAP, 10 GA	40	0
83732	1200 LB CAP 10 GA S	500	0
83740	11000 LB CAPACITY 1	100	0
83742	WHITE ZINC D-RING A	100	0
83750	18800 LB CAP 5/8 IN	25	0
83760	26500 LB CAP 3/4 IN	1	0
83770	46760 LB CAP 1 IN F	1	0
83780	46760 LB CAP 1 IN X	8	0

MP = MASTER PACK / **IP** = INNER PACK

CUSTOM WIRING PRODUCTS LISTED NUMERICALLY

Part #	Years	Make / Model	Master Pk
55050	07-07	DODGE CALIBER	12
55050	07-10	JEEP COMPASS	12
55050	07-07	JEEP PATRIOT	12
55057	03-08	PONTIAC VIBE	12
55106	07-11	HONDA CR-V	12
55124	07-18	JEEP WRANGLER	18
55240	96-03	CHEVROLET EXPRESS 1500	18
55240	96-03	CHEVROLET EXPRESS 2500	18
55240	96-03	CHEVROLET EXPRESS 3500	18
55240	96-03	GMC SAVANA 1500	18
55240	96-03	GMC SAVANA 2500	18
55240	96-03	GMC SAVANA 3500	18
55241	95-01	FORD EXPLORER	18
55241	98-99	FORD RANGER	18
55241	98-01	MAZDA B2500	18
55241	98-01	MAZDA B3000	18
55241	98-01	MAZDA B4000	18
55241	97-01	MERCURY MOUNTAINEER	18
55242	97-03	FORD F-150	5
55242	04-04	FORD F-150 HERITAGE	5
55242	97-99	FORD F-250	5
55243	99-01	FORD F-250 SUPER DUTY	5
55243	99-01	FORD F-350 SUPER DUTY	5
55243	99-01	FORD F-450 SUPER DUTY	5
55243	99-01	FORD F-550 SUPER DUTY	5
55244	00-04	NISSAN XTERRA	18
55245	01-07	LEXUS LX470	18
55245	08-11	LEXUS LX570	18
55245	01-03	LEXUS RX300	18
55245	01-02	TOYOTA 4RUNNER	18
55245	01-22	TOYOTA HIGHLANDER	18
55245	01-02	TOYOTA LAND CRUISER	18
55246	01-02	TOYOTA SEQUOIA	18
55247	99-01	FORD F-250 SUPER DUTY	18
55247	99-01	FORD F-350 SUPER DUTY	18
55251	02-05	FORD EXPLORER	18
55251	03-05	LINCOLN NAVIGATOR	18
55251	02-05	MERCURY MOUNTAINEER	18
55255	01-04	FORD ESCAPE	18
55255	01-04	MAZDA TRIBUTE	18
55256	97-04	FORD F-150	18
55256	97-99	FORD F-250	18
55260	95-98	JEEP GRAND CHEROKEE	12
55265	02-04	FORD F-250 SUPER DUTY	12
55265	02-04	FORD F-350 SUPER DUTY	12
55301	73-79	FORD F-150	18
55301	73-79	FORD F-250	18
55301	73-79	FORD F-350	18
55307	01-05	TOYOTA RAV4	12
55308	02-06	TOYOTA CAMRY	12
55309	02-05	KIA SEDONA	12
55310	09-12	HYUNDAI ELANTRA	12
55310	01-06	HYUNDAI SANTA FE	12
55310	06-11	KIA RIO5	12
55311	73-74	CHEVROLET BLAZER	18
55311	75-84	CHEVROLET C10	18
55311	73-74	CHEVROLET C10 PICKUP	18
55311	73-84	CHEVROLET C10 SUBURBAN	18
55311	75-84	CHEVROLET C20	18
55311	73-74	CHEVROLET C20 PICKUP	18
55311	73-84	CHEVROLET C20 SUBURBAN	18
55311	75-84	CHEVROLET C30	18
55311	73-74	CHEVROLET C30 PICKUP	18
55311	75-84	CHEVROLET K10	18
55311	73-74	CHEVROLET K10 PICKUP	18
55311	73-84	CHEVROLET K10 SUBURBAN	18

Part #	Years	Make / Model	Master Pk
55311	75-84	CHEVROLET K20	18
55311	73-74	CHEVROLET K20 PICKUP	18
55311	73-84	CHEVROLET K20 SUBURBAN	18
55311	77-84	CHEVROLET K30	18
55311	73-74	CHEVROLET K30 PICKUP	18
55311	75-84	CHEVROLET K5 BLAZER	18
55311	75-78	GMC C15	18
55311	75-78	GMC C15 SUBURBAN	18
55311	73-74	GMC C15/C1500 PICKUP	18
55311	73-74	GMC C15/C1500 SUBURBAN	18
55311	79-84	GMC C1500	18
55311	79-84	GMC C1500 SUBURBAN	18
55311	75-78	GMC C25	18
55311	75-78	GMC C25 SUBURBAN	18
55311	73-74	GMC C25/C2500 PICKUP	18
55311	73-74	GMC C25/C2500 SUBURBAN	18
55311	79-84	GMC C2500	18
55311	79-84	GMC C2500 SUBURBAN	18
55311	75-78	GMC C35	18
55311	73-74	GMC C35/C3500 PICKUP	18
55311	79-84	GMC C3500	18
55311	75-78	GMC K15	18
55311	75-78	GMC K15 SUBURBAN	18
55311	73-74	GMC K15/K1500 PICKUP	18
55311	73-74	GMC K15/K1500 SUBURBAN	18
55311	79-84	GMC K1500	18
55311	79-84	GMC K1500 SUBURBAN	18
55311	75-78	GMC K25	18
55311	75-78	GMC K25 SUBURBAN	18
55311	73-74	GMC K25/K2500 PICKUP	18
55311	73-74	GMC K25/K2500 SUBURBAN	18
55311	79-84	GMC K2500	18
55311	79-84	GMC K2500 SUBURBAN	18
55311	77-78	GMC K35	18
55311	73-74	GMC K35/K3500 PICKUP	18
55311	79-84	GMC K3500	18
55312	85-86	CHEVROLET C10	18
55312	85-86	CHEVROLET C10 SUBURBAN	18
55312	94-94	CHEVROLET C1500	18
55312	85-86	CHEVROLET C20	18
55312	85-86	CHEVROLET C20 SUBURBAN	18
55312	85-86	CHEVROLET C30	18
55312	85-86	CHEVROLET K10	18
55312	85-86	CHEVROLET K10 SUBURBAN	18
55312	85-86	CHEVROLET K20	18
55312	85-86	CHEVROLET K20 SUBURBAN	18
55312	85-86	CHEVROLET K30	18
55312	85-97	CHEVROLET S10	18
55312	85-86	GMC C1500	18
55312	85-86	GMC C1500 SUBURBAN	18
55312	85-86	GMC C2500	18
55312	85-86	GMC C2500 SUBURBAN	18
55312	85-86	GMC C3500	18
55312	85-86	GMC K1500	18
55312	85-86	GMC K1500 SUBURBAN	18
55312	85-86	GMC K2500	18
55312	85-86	GMC K2500 SUBURBAN	18
55312	85-86	GMC K3500	18
55312	85-90	GMC S15	18
55312	91-97	GMC SONOMA	18
55312	91-91	GMC SYCLONE	18
55312	96-97	ISUZU HOMBRE	18
55313	80-86	FORD BRONCO	18
55313	80-83	FORD F-100	18
55313	80-86	FORD F-150	18
55313	80-86	FORD F-250	18

Part #	Years	Make / Model	Master Pk
55313	80-86	FORD F-350	18
55314	86-92	FORD RANGER	18
55315	88-99	GMC C1500	18
55315	88-00	GMC C2500	18
55315	88-00	GMC C3500	18
55315	88-99	GMC K1500	18
55315	88-00	GMC K2500	18
55315	88-00	GMC K3500	18
55316	87-96	FORD F-150	18
55316	87-96	FORD F-250	18
55316	97-97	FORD F-250 HD	18
55316	87-97	FORD F-350	18
55317	94-94	DODGE B250	12
55317	86-89	DODGE D100	12
55317	86-93	DODGE D150	12
55317	86-93	DODGE D250	12
55317	86-93	DODGE D350	12
55317	87-94	DODGE DAKOTA	12
55317	94-94	DODGE RAM 1500	12
55317	94-94	DODGE RAM 2500	12
55317	94-94	DODGE RAM 3500	12
55317	86-93	DODGE RAM 50	12
55317	86-93	DODGE RAMCHARGER	12
55317	86-89	DODGE W100	12
55317	86-93	DODGE W150	12
55317	86-93	DODGE W250	12
55317	86-93	DODGE W350	12
55319	99-00	CADILLAC ESCALADE	18
55319	92-94	CHEVROLET BLAZER	18
55319	92-99	CHEVROLET C1500 SUBURBAN	18
55319	92-99	CHEVROLET C2500 SUBURBAN	18
55319	92-99	CHEVROLET K1500 SUBURBAN	18
55319	92-99	CHEVROLET K2500 SUBURBAN	18
55319	95-00	CHEVROLET TAHOE	18
55319	92-99	GMC C1500 SUBURBAN	18
55319	92-99	GMC C2500 SUBURBAN	18
55319	92-99	GMC K1500 SUBURBAN	18
55319	92-99	GMC K2500 SUBURBAN	18
55319	92-00	GMC YUKON	18
55319	00-00	GMC YUKON XL 1500	18
55319	00-00	GMC YUKON XL 2500	18
55323	91-95	CHRYSLER TOWN & COUNTRY	18
55323	91-95	DODGE CARAVAN	18
55323	04-10	DODGE DAKOTA	18
55323	91-95	DODGE GRAND CARAVAN	18
55323	06-09	MITSUBISHI RAIDER	18
55323	91-95	PLYMOUTH GRAND VOYAGER	18
55324	91-94	FORD EXPLORER	12
55324	91-94	MAZDA NAVAJO	12
55325	93-99	FORD RANGER	12
55325	94-08	MAZDA B2300	12
55325	98-01	MAZDA B2500	12
55325	94-07	MAZDA B3000	12
55325	94-08	MAZDA B4000	12
55326	92-97	FORD CROWN VICTORIA	18
55326	94-04	FORD MUSTANG	18
55326	92-97	MERCURY GRAND MARQUIS	18
55329	95-03	DODGE DAKOTA	12
55329	95-01	DODGE RAM 1500	12
55329	95-02	DODGE RAM 2500	12
55329	95-02	DODGE RAM 3500	12
55334	00-00	CHRYSLER GRAND VOYAGER	12
55334	96-00	CHRYSLER TOWN & COUNTRY	12
55334	00-00	CHRYSLER VOYAGER	12
55334	96-00	DODGE CARAVAN	12
55334	98-03	DODGE DURANGO	12

Part #	Years	Make / Model	Master Pk
55334	96-00	DODGE GRAND CARAVAN	12
55334	96-00	PLYMOUTH GRAND VOYAGER	12
55334	96-00	PLYMOUTH VOYAGER	12
55335	96-99	CHEVROLET EXPRESS 1500	12
55335	96-99	CHEVROLET EXPRESS 2500	12
55335	96-99	CHEVROLET EXPRESS 3500	12
55335	96-99	GMC SAVANA 1500	12
55335	96-99	GMC SAVANA 2500	12
55335	96-99	GMC SAVANA 3500	12
55336	97-03	ACURA CL	18
55336	94-01	ACURA INTEGRA	18
55336	01-06	ACURA MDX	18
55336	96-01	ACURA RL	18
55336	96-03	ACURA TL	18
55336	94-02	HONDA ACCORD	18
55336	97-06	HONDA CR-V	18
55336	03-04	HONDA ELEMENT	18
55336	95-04	HONDA ODYSSEY	18
55336	03-08	HONDA PILOT	18
55336	01-01	HONDA PRELUDE	18
55336	96-99	ISUZU OASIS	18
55338	87-95	CHEVROLET G10	12
55338	87-95	CHEVROLET G20	12
55338	87-95	CHEVROLET G30	12
55338	87-95	GMC G1500	12
55338	87-95	GMC G2500	12
55338	87-95	GMC G3500	12
55339	96-99	ACURA SLX	18
55339	92-02	ISUZU TROOPER	18
55341	96-02	TOYOTA 4RUNNER	12
55343	92-94	FORD E-150 ECONOLINE	12
55343	92-94	FORD E-150 ECONO. CLUB WAG.	12
55343	92-94	FORD E-250 ECONOLINE	12
55343	92-94	FORD E-350 ECONOLINE	12
55343	92-94	FORD E-350 ECONO. CLUB WAG.	12
55343	01-03	FORD ESCAPE	12
55343	01-03	MAZDA TRIBUTE	12
55343	96-05	MERCURY SABLE	12
55344	03-03	FORD E-150	18
55344	03-03	FORD E-150 CLUB WAGON	18
55344	95-02	FORD E-150 ECONOLINE	18
55344	95-02	FORD E-150 ECONO. CLUB WAG.	18
55344	03-03	FORD E-250	18
55344	95-02	FORD E-250 ECONOLINE	18
55344	03-03	FORD E-350 CLUB WAGON	18
55344	95-98	FORD E-350 ECONOLINE	18
55344	95-02	FORD E-350 ECONO. CLUB WAG.	18
55344	99-03	FORD E-350 SUPER DUTY	18
55344	00-02	FORD E-450 ECONO. SUPER DUTY	18
55344	03-03	FORD E-450 SUPER DUTY	18
55344	02-02	FORD E-550 ECONO. SUPER DUTY	18
55344	03-03	FORD E-550 SUPER DUTY	18
55344	96-99	FORD ECONOLINE SUPER DUTY	18
55344	97-99	FORD ESCORT	18
55344	00-03	FORD EXCURSION	18
55344	97-03	FORD EXPEDITION	18
55344	01-03	FORD EXPLORER	18
55344	02-03	FORD EXPLORER SPORT TRAC	18
55344	97-03	FORD F-150	18
55344	04-04	FORD F-150 HERITAGE	18
55344	00-03	FORD FOCUS	18
55344	00-03	FORD RANGER	18
55344	03-04	LINCOLN AVIATOR	18
55344	98-03	LINCOLN NAVIGATOR	18
55344	02-03	MERCURY MOUNTAINEER	18
55344	97-99	MERCURY TRACER	18
55345	95-01	FORD EXPLORER	12
55345	97-01	MERCURY MOUNTAINEER	12
55346	95-98	FORD WINDSTAR	12
55347	91-96	BUICK ROADMASTER	18

Part #	Years	Make / Model	Master Pk
55347	91-96	CHEVROLET CAPRICE	18
55347	94-96	CHEVROLET IMPALA	18
55349	94-98	JEEP GRAND CHEROKEE	12
55350	92-96	FORD BRONCO	18
55352	91-96	BUICK ROADMASTER	18
55352	91-96	CHEVROLET CAPRICE	18
55352	91-92	OLDSMOBILE CUSTOM CRUISER	18
55353	87-95	NISSAN PATHFINDER	12
55353	95-97	NISSAN PICKUP	12
55354	97-01	JEEP CHEROKEE	12
55355	97-05	CHEVROLET VENTURE	12
55355	97-04	OLDSMOBILE SILHOUETTE	12
55355	99-09	PONTIAC MONTANA	12
55355	97-98	PONTIAC TRANS SPORT	12
55356	97-97	JEEP TJ	12
55356	91-97	JEEP WRANGLER	12
55358	97-01	TOYOTA CAMRY	12
55359	98-04	CHEVROLET S10	18
55359	98-04	GMC SONOMA	18
55359	98-00	ISUZU HOMBRE	18
55360	98-02	HONDA PASSPORT	12
55360	98-00	ISUZU AMIGO	12
55360	98-04	ISUZU RODEO	12
55360	01-03	ISUZU RODEO SPORT	12
55361	97-03	INFINITI QX4	12
55361	98-01	NISSAN ALTIMA	12
55361	96-04	NISSAN PATHFINDER	12
55363	98-06	JEEP WRANGLER	12
55364	99-04	CHRYSLER 300M	12
55364	98-02	CHRYSLER CONCORDE	12
55364	99-99	CHRYSLER LHS	12
55364	98-04	DODGE INTREPID	12
55365	98-99	LEXUS LX470	18
55365	98-99	TOYOTA LAND CRUISER	18
55367	00-00	TOYOTA TUNDRA	12
55368	99-00	DODGE RAM 1500 VAN	18
55368	99-00	DODGE RAM 2500 VAN	18
55368	99-00	DODGE RAM 3500 VAN	18
55369	99-04	JEEP GRAND CHEROKEE	12
55370	06-07	SUBARU B9 TRIBECA	12
55370	98-08	SUBARU FORESTER	12
55370	04-04	SUBARU IMPREZA	12
55370	96-99	SUBARU LEGACY	12
55370	00-09	SUBARU OUTBACK	12
55370	08-14	SUBARU TRIBECA	12
55371	98-02	KIA SPORTAGE	12
55372	98-04	CHEVROLET TRACKER	18
55372	96-97	GEO TRACKER	18
55372	99-05	SUZUKI GRAND VITARA	18
55372	89-98	SUZUKI SIDEKICK	18
55372	99-04	SUZUKI VITARA	18
55372	02-06	SUZUKI XL-7	18
55375	00-03	FORD TAURUS	18
55375	00-03	MERCURY SABLE	18
55376	01-03	CHRYSLER TOWN & COUNTRY	12
55376	01-03	CHRYSLER VOYAGER	12
55376	01-03	DODGE CARAVAN	12
55376	01-03	DODGE GRAND CARAVAN	12
55377	00-02	CHEVROLET EXPRESS 1500	12
55377	00-02	CHEVROLET EXPRESS 2500	12
55377	00-02	CHEVROLET EXPRESS 3500	12
55377	00-02	GMC SAVANA 1500	12
55377	00-02	GMC SAVANA 2500	12
55377	00-02	GMC SAVANA 3500	12
55378	01-02	TOYOTA TUNDRA	12
55379	89-95	TOYOTA PICKUP	12
55379	95-04	TOYOTA TACOMA	12
55380	01-06	MITSUBISHI MONTERO	12
55381	07-08	CHRYSLER ASPEN	18
55381	04-08	CHRYSLER PACIFICA	18

Part #	Years	Make / Model	Master Pk
55381	00-09	DODGE DAKOTA	18
55381	00-08	DODGE DURANGO	18
55381	00-08	DODGE RAM 1500	18
55381	01-03	DODGE RAM 1500 VAN	18
55381	00-09	DODGE RAM 2500	18
55381	01-03	DODGE RAM 2500 VAN	18
55381	00-09	DODGE RAM 3500	18
55381	01-03	DODGE RAM 3500 VAN	18
55381	03-09	DODGE SPRINTER 2500	18
55381	03-09	DODGE SPRINTER 3500	18
55381	03-09	FREIGHTLINER SPRINTER 2500	18
55381	03-09	FREIGHTLINER SPRINTER 3500	18
55381	06-10	JEEP COMMANDER	18
55381	00-10	JEEP GRAND CHEROKEE	18
55381	05-08	JEEP LIBERTY	18
55381	06-09	MITSUBISHI RAIDER	18
55382	02-07	JEEP LIBERTY	12
55383	02-07	BUICK RENDEZVOUS	12
55383	01-05	PONTIAC AZTEK	12
55400	06-11	HYUNDAI AZERA	12
55400	01-07	TOYOTA HIGHLANDER	12
55411	95-05	CHEVROLET ASTRO	18
55411	95-02	CHEVROLET BLAZER	18
55411	95-01	GMC JIMMY	18
55411	95-05	GMC SAFARI	18
55411	96-01	OLDSMOBILE BRAVADA	18
55414	06-10	JEEP COMMANDER	12
55418	98-03	TOYOTA SIENNA	12
55432	05-10	CHEVROLET COBALT	18
55432	06-11	CHEVROLET HHR	18
55432	07-09	PONTIAC G5	18
55432	05-06	PONTIAC PURSUIT	18
55434	05-10	CHEVROLET COBALT	12
55434	07-10	PONTIAC G5	12
55434	05-06	PONTIAC PURSUIT	12
55441	05-22	NISSAN FRONTIER	18
55441	05-10	NISSAN PATHFINDER	18
55441	05-15	NISSAN XTERRA	18
55441	09-12	SUZUKI EQUATOR	18
55451	05-06	JEEP GRAND CHEROKEE	12
55486	96-00	TOYOTA RAV4	12
55502	06-14	ACURA TSX	12
55502	03-12	HONDA ACCORD	12
55504	02-05	DODGE RAM 1500	12
55504	03-05	DODGE RAM 2500	12
55504	03-05	DODGE RAM 3500	12
55510	04-12	CHEVROLET COLORADO	12
55510	04-12	GMC CANYON	12
55510	06-06	ISUZU I-280	12
55510	07-08	ISUZU I-290	12
55510	06-06	ISUZU I-350	12
55510	07-08	ISUZU I-370	12
55513	08-12	TOYOTA HILUX	12
55513	93-98	TOYOTA T100	12
55513	05-15	TOYOTA TACOMA	12
55522	00-02	TOYOTA ECHO	12
55522	03-08	TOYOTA MATRIX	12
55528	05-09	HYUNDAI TUCSON	12
55529	05-10	KIA SPORTAGE	18
55530	04-08	CHRYSLER PACIFICA	12
55532	01-10	CHRYSLER PT CRUISER	12
55534	05-07	CHRYSLER 300	12
55534	08-14	DODGE CHALLENGER	12
55534	06-10	DODGE CHARGER	12
55537	04-07	CHRYSLER TOWN & COUNTRY	12
55537	04-07	DODGE CARAVAN	12
55537	04-07	DODGE GRAND CARAVAN	12
55540	03-14	CHEVROLET EXPRESS 1500	12
55540	03-22	CHEVROLET EXPRESS 2500	12
55540	03-22	CHEVROLET EXPRESS 3500	12

Part #	Years	Make / Model	Master Pk
55540	03-14	GMC SAVANA 1500	12
55540	03-22	GMC SAVANA 2500	12
55540	03-22	GMC SAVANA 3500	12
55542	03-13	TOYOTA COROLLA	12
55546	05-10	CHRYSLER 300	12
55550	03-06	KIA SORENTO	18
55551	04-04	FORD F-150	12
55551	04-04	FORD F-150 HERITAGE	12
55560	05-06	CHEVROLET EQUINOX	12
55560	06-06	PONTIAC TORRENT	12
55562	05-08	DODGE MAGNUM	12
55563	04-06	LEXUS RX330	12
55563	07-12	LEXUS RX350	12
55565	03-06	MITSUBISHI OUTLANDER	12
55567	14-18	MAZDA 3	12
55567	03-08	MAZDA 6	12
55567	07-12	MAZDA CX-7	12
55567	07-17	TOYOTA CAMRY	12
55567	14-19	TOYOTA COROLLA	12
55567	07-14	TOYOTA FJ CRUISER	12
55570	04-09	NISSAN QUEST	12
55571	03-14	NISSAN MURANO	12
55580	04-10	TOYOTA SIENNA	12
55585	06-14	HONDA RIDGELINE	12
55587	05-07	FORD FIVE HUNDRED	18
55587	05-07	FORD FREESTYLE	18
55593	07-12	MAZDA CX-7	12
55597	07-09	CHRYSLER ASPEN	12
55597	04-09	DODGE DURANGO	12
56000	99-18	CHEVROLET SILVERADO 1500	20
56000	07-07	CHEVY SILV. 1500 CLASSIC	20
56000	01-06	CHEVY SILVERADO 1500 HD	20
56000	07-07	CHEVY SILV. 1500 HD CLASSIC	20
56000	19-19	CHEVY SILVERADO 1500 LD	20
56000	99-04	CHEVROLET SILVERADO 2500	20
56000	01-19	CHEVY SILVERADO 2500 HD	20
56000	07-07	CHEVY SILV. 2500 HD CLAS.	20
56000	01-06	CHEVROLET SILVERADO 3500	20
56000	07-07	CHEVY SILVERADO 3500 CLAS.	20
56000	08-19	CHEVY SILVERADO 3500 HD	20
56000	09-10	DODGE RAM 1500	20
56000	10-10	DODGE RAM 2500	20
56000	10-10	DODGE RAM 3500	20
56000	97-14	FORD F-150	20
56000	04-04	FORD F-150 HERITAGE	20
56000	97-99	FORD F-250	20
56000	97-97	FORD F-250 HD	20
56000	99-16	FORD F-250 SUPER DUTY	20
56000	99-23	FORD F-350 SUPER DUTY	20
56000	99-23	FORD F-450 SUPER DUTY	20
56000	99-23	FORD F-550 SUPER DUTY	20
56000	99-18	GMC SIERRA 1500	20
56000	07-07	GMC SIERRA 1500 CLASSIC	20
56000	01-06	GMC SIERRA 1500 HD	20
56000	07-07	GMC SIERRA 1500 HD CLASSIC	20
56000	19-19	GMC SIERRA 1500 LIMITED	20
56000	99-04	GMC SIERRA 2500	20
56000	01-19	GMC SIERRA 2500 HD	20
56000	07-07	GMC SIERRA 2500 HD CLASSIC	20
56000	01-06	GMC SIERRA 3500	20
56000	07-07	GMC SIERRA 3500 CLASSIC	20
56000	07-19	GMC SIERRA 3500 HD	20
56000	04-23	NISSAN TITAN	20
56000	16-23	NISSAN TITAN XD	20
56000	11-23	RAM 1500	20
56000	19-23	RAM 1500 CLASSIC	20
56000	11-23	RAM 2500	20
56000	11-23	RAM 3500	20
56000	10-23	TOYOTA TUNDRA	20
56001	95-10	DODGE DAKOTA	12

Part #	Years	Make / Model	Master Pk
56001	95-08	DODGE RAM 1500	12
56001	95-09	DODGE RAM 2500	12
56001	95-09	DODGE RAM 3500	12
56002	06-12	SUZUKI GRAND VITARA	12
56002	07-11	SUZUKI SX4	12
56003	19-23	CHEVROLET SILVERADO 1500	4
56003	22-22	CHEVROLET SILV.1500 LTD	4
56003	20-23	CHEVROLET SILV. 2500 HD	4
56003	20-23	CHEVROLET SILV. 3500 HD	4
56003	19-23	GMC SIERRA 1500	4
56003	22-22	GMC SIERRA 1500 LIMITED	4
56003	20-23	GMC SIERRA 2500 HD	4
56003	20-23	GMC SIERRA 3500 HD	4
56008	07-18	ACURA RDX	12
56008	10-11	HONDA ACCORD CROSSTOUR	12
56009	07-13	JEEP GRAND CHEROKEE	18
56010	00-06	MAZDA MPV	12
56011	11-15	HONDA ACCORD	12
56011	06-15	HONDA CIVIC	12
56011	07-13	HONDA FIT	12
56011	04-13	MAZDA 3	12
56011	13-15	MAZDA CX-5	12
56011	09-12	MITSUBISHI GALANT	12
56012	07-09	CHEVROLET EQUINOX	18
56012	07-09	PONTIAC TORRENT	18
56012	07-08	SUZUKI XL-7	18
56013	04-07	CHEVROLET MALIBU	18
56013	05-09	PONTIAC G6	18
56014	05-11	CHEVROLET CORVETTE	18
56014	07-11	FORD FOCUS	18
56014	11-11	FORD RANGER	18
56015	08-09	FORD TAURUS	18
56015	08-09	MERCURY SABLE	18
56016	11-14	MAZDA 2	12
56016	06-15	MAZDA 5	12
56016	07-15	MAZDA CX-9	12
56018	02-07	SATURN VUE	12
56020	04-14	FORD E-150	12
56020	04-14	FORD E-250	12
56020	04-18	FORD E-350 SUPER DUTY	12
56021	07-12	NISSAN VERSA	12
56022	07-15	NISSAN ALTIMA	12
56022	04-14	NISSAN MAXIMA	12
56022	07-12	NISSAN SENTRA	12
56025	07-10	SATURN OUTLOOK	18
56026	12-12	CHEVROLET CAPTIVA SPORT	12
56026	08-10	SATURN VUE	12
56027	08-12	BUICK ENCLAVE	18
56027	08-12	CHEVROLET MALIBU	18
56027	09-12	CHEVROLET TRAVERSE	18
56028	08-10	DODGE AVENGER	12
56029	07-11	HONDA ELEMENT	12
56030	04-06	SCION XB	12
56031	97-07	FORD F-150	18
56031	04-04	FORD F-150 HERITAGE	18
56032	03-07	FORD F-250 SUPER DUTY	18
56032	03-07	FORD F-350 SUPER DUTY	18
56033	11-12	INFINITI G25	12
56033	07-08	INFINITI G35	12
56033	09-13	INFINITI G37	12
56033	14-15	INFINITI Q60	12
56033	08-20	NISSAN ROGUE	12
56035	09-10	PONTIAC VIBE	12
56035	11-15	SCION XB	12
56035	09-13	TOYOTA MATRIX	12
56036	03-07	SATURN ION	12
56037	09-09	DODGE JOURNEY	12
56038	07-13	ACURA MDX	12
56039	04-11	MITSUBISHI ENDEAVOR	12
56040	19-24	SUBARU ASCENT	18

Part #	Years	Make / Model	Master Pk
56040	16-24	SUBARU CROSSTREK	18
56040	09-23	SUBARU FORESTER	18
56040	10-24	SUBARU OUTBACK	18
56040	13-15	SUBARU XV CROSSTREK	18
56041	09-14	HYUNDAI GENESIS	12
56042	08-19	TOYOTA HIGHLANDER	18
56043	03-07	CADILLAC CTS	12
56044	08-15	CADILLAC CTS	12
56045	05-14	VOLVO XC90	12
56046	06-13	CHEVROLET IMPALA	18
56046	14-16	CHEVROLET IMPALA LIMITED	18
56047	06-11	BUICK LUCERNE	12
56047	14-19	FORD FIESTA	12
56048	06-12	FORD FUSION	12
56049	06-10	HYUNDAI ELANTRA	12
56049	06-14	HYUNDAI SONATA	12
56049	09-09	KIA OPTIMA	12
56050	06-07	HONDA ACCORD	12
56051	06-15	HONDA CIVIC	12
56053	03-05	HONDA ACCORD	12
56054	07-10	CHRYSLER SEBRING	12
56055	08-09	FORD TAURUS X	12
56056	07-12	GMC ACADIA	18
56058	07-09	KIA AMANTI	12
56058	11-15	KIA OPTIMA	12
56059	07-16	VOLVO S80	12
56061	08-14	SUBARU IMPREZA	12
56062	08-10	SCION XB	12
56064	11-13	FORD FIESTA	12
56064	09-10	LINCOLN MKS	12
56066	08-09	SUZUKI SX4	12
56070	99-18	CHEVROLET SILVERADO 1500	20
56070	07-07	CHEVY SILV. 1500 CLASSIC	20
56070	01-06	CHEVY SILVERADO 1500 HD	20
56070	07-07	CHEVY SILV. 1500 HD CLASSIC	20
56070	19-19	CHEVY SILVERADO 1500 LD	20
56070	99-04	CHEVROLET SILVERADO 2500	20
56070	01-19	CHEVY SILVERADO 2500 HD	20
56070	07-07	CHEVY SILV. 2500 HD CLASSIC	20
56070	01-06	CHEVROLET SILVERADO 3500	20
56070	07-07	CHEVY SILV. 3500 CLASSIC	20
56070	08-19	CHEVY SILVERADO 3500 HD	20
56070	09-10	DODGE RAM 1500	20
56070	10-10	DODGE RAM 2500	20
56070	10-10	DODGE RAM 3500	20
56070	97-14	FORD F-150	20
56070	04-04	FORD F-150 HERITAGE	20
56070	97-99	FORD F-250	20
56070	97-97	FORD F-250 HD	20
56070	99-16	FORD F-250 SUPER DUTY	20
56070	99-23	FORD F-350 SUPER DUTY	20
56070	99-23	FORD F-450 SUPER DUTY	20
56070	99-23	FORD F-550 SUPER DUTY	20
56070	99-18	GMC SIERRA 1500	20
56070	07-07	GMC SIERRA 1500 CLASSIC	20
56070	01-06	GMC SIERRA 1500 HD	20
56070	07-07	GMC SIERRA 1500 HD CLASSIC	20
56070	19-19	GMC SIERRA 1500 LIMITED	20
56070	99-04	GMC SIERRA 2500	20
56070	01-19	GMC SIERRA 2500 HD	20
56070	07-07	GMC SIERRA 2500 HD CLASSIC	20
56070	01-06	GMC SIERRA 3500	20
56070	07-07	GMC SIERRA 3500 CLASSIC	20
56070	07-19	GMC SIERRA 3500 HD	20
56070	04-23	NISSAN TITAN	20
56070	16-23	NISSAN TITAN XD	20
56070	11-23	RAM 1500	20
56070	19-23	RAM 1500 CLASSIC	20
56070	11-23	RAM 2500	20
56070	11-23	RAM 3500	20

Part #	Years	Make / Model	Master Pk
56070	10-23	TOYOTA TUNDRA	20
56071	95-10	DODGE DAKOTA	12
56071	95-08	DODGE RAM 1500	12
56071	95-09	DODGE RAM 2500	12
56071	95-09	DODGE RAM 3500	12
56072	19-23	CHEVROLET SILVERADO 1500	12
56072	22-22	CHEVY SILVERADO 1500 LTD	12
56072	20-23	CHEVY SILVERADO 2500 HD	12
56072	20-23	CHEVY SILVERADO 3500 HD	12
56072	19-23	GMC SIERRA 1500	12
56072	22-22	GMC SIERRA 1500 LIMITED	12
56072	20-23	GMC SIERRA 2500 HD	12
56072	20-23	GMC SIERRA 3500 HD	12
56073	04-07	FORD FREESTAR	18
56073	04-07	MERCURY MONTEREY	18
56074	09-12	INFINITI FX35	12
56074	13-13	INFINITI FX37	12
56074	09-13	INFINITI FX50	12
56074	14-17	INFINITI QX70	12
56076	04-08	PONTIAC GRAND PRIX	18
56077	05-07	BUICK TERRAZA	18
56077	05-08	CHEVROLET UPLANDER	18
56077	05-06	PONTIAC MONTANA	18
56077	05-07	SATURN RELAY	18
56078	07-12	HYUNDAI SANTA FE	12
56078	10-13	KIA FORTE	12
56079	11-12	TOYOTA AVALON	12
56079	07-11	TOYOTA CAMRY	12
56079	09-16	TOYOTA VENZA	12
56081	04-06	CHEVROLET AVEO	12
56081	07-11	CHEVROLET AVEO5	12
56081	09-09	PONTIAC G3	12
56082	06-15	MAZDA MX-5 MIATA	12
56083	10-23	LEXUS RX350	12
56083	18-22	LEXUS RX350L	12
56083	10-23	LEXUS RX450H	12
56084	09-14	NISSAN CUBE	12
56088	10-21	FORD MUSTANG	12
56090	10-13	FORD TRANSIT CONNECT	12
56091	10-14	SUBARU LEGACY	12
56093	11-23	FORD EXPLORER	12
56093	10-19	FORD TAURUS	12
56093	13-16	LINCOLN MKS	12
56094	10-17	CHEVROLET EQUINOX	18
56094	10-17	GMC TERRAIN	18
56095	10-19	LINCOLN MKT	12
56096	10-16	CADILLAC SRX	18
56098	10-16	BUICK LACROSSE	12
56099	11-16	LEXUS CT200H	12
56099	10-12	LEXUS HS250H	12
56102	07-13	MITSUBISHI OUTLANDER	12
56103	10-11	SUZUKI KIZASHI	12
56104	09-09	KIA BORREGO	12
56106	11-20	TOYOTA SIENNA	12
56107	04-07	TOYOTA HIGHLANDER	12
56109	10-20	DODGE JOURNEY	18
56110	10-19	FORD F-150	18
56111	08-12	SUBARU IMPREZA	12
56114	11-13	FORD FIESTA	18
56116	00-05	CHEVROLET IMPALA	18
56117	10-10	INFINITI G37	12
56120	11-14	FORD EDGE	12
56121	11-15	LINCOLN MKX	12
56124	11-16	NISSAN JUKE	12
56126	11-16	HYUNDAI ELANTRA	12
56127	10-17	MITSUBISHI LANCER	12
56127	11-19	MITSUBISHI OUTLANDER SPORT	12
56127	11-12	MITSUBISHI RVR	12
56131	11-13	KIA FORTE	12
56133	11-13	DODGE DURANGO	18

Part #	Years	Make / Model	Master Pk
56135	11-14	DODGE CHARGER	12
56136	08-14	SCION XD	12
56138	12-18	FORD FOCUS	12
56139	09-13	MAZDA 6	12
56140	12-14	FORD FOCUS	12
56141	11-11	NISSAN PATHFINDER	18
56142	09-14	LEXUS IS F	12
56142	16-16	LEXUS IS200T	12
56142	09-15	LEXUS IS250	12
56142	16-16	LEXUS IS300	12
56142	09-16	LEXUS IS350	12
56145	11-14	CHRYSLER 300	12
56147	04-15	TOYOTA PRIUS	12
56148	12-21	NISSAN NV1500	12
56148	12-21	NISSAN NV2500	12
56148	12-21	NISSAN NV3500	12
56149	12-17	HYUNDAI ACCENT	12
56153	12-17	HYUNDAI VELOSTER	12
56156	12-17	TOYOTA PRIUS V	12
56157	12-17	KIA RIO	12
56158	12-16	HONDA CR-V	12
56159	12-14	LAND ROV. RGE ROVER EVOQUE	18
56161	05-10	HONDA ODYSSEY	12
56165	06-12	TOYOTA RAV4	12
56170	12-15	HONDA PILOT	12
56172	11-19	FORD EXPLORER	12
56172	13-18	FORD POLICE INTERCEP. ULTY	12
56173	13-17	HONDA ACCORD	12
56174	12-18	FIAT 500	12
56176	13-15	CHEVROLET MALIBU	12
56176	16-16	CHEVROLET MALIBU LIMITED	12
56179	13-16	DODGE DART	12
56180	13-19	CADILLAC ATS	12
56181	13-17	CHEVROLET TRAVERSE	12
56184	13-18	HYUNDAI SANTA FE	12
56184	13-18	HYUNDAI SANTA FE SPORT	12
56184	09-09	KIA BORREGO	12
56185	14-18	NISSAN VERSA	12
56188	14-20	CHEVROLET IMPALA	12
56189	14-20	MITSUBISHI OUTLANDER	12
56191	14-19	FORD FIESTA	12
56192	14-20	ACURA MDX	12
56193	14-17	FIAT 500L	12
56197	14-15	CHEVROLET CAMARO	12
56205	13-19	NISSAN SENTRA	12
56206	14-18	NISSAN VERSA NOTE	12
56207	14-19	CADILLAC CTS	12
56208	14-18	JEEP CHEROKEE	12
56209	14-23	RAM PROMASTER 1500	12
56209	14-23	RAM PROMASTER 2500	12
56209	14-23	RAM PROMASTER 3500	12
56210	10-17	CHEVROLET EQUINOX	18
56210	10-17	GMC TERRAIN	18
56211	11-14	CHRYSLER 200	12
56211	11-14	DODGE AVENGER	12
56212	13-16	SCION FR-S	12
56212	13-20	SUBARU BRZ	12
56212	17-23	SUBARU IMPREZA	12
56214	11-15	CHEVROLET CRUZE	12
56214	16-16	CHEVROLET CRUZE LIMITED	12
56215	13-15	HONDA CROSSTOUR	12
56216	13-16	BUICK ENCORE	12
56217	20-21	LEXUS RX350	12
56217	20-21	LEXUS RX350L	12
56217	08-19	TOYOTA HIGHLANDER	12
56218	14-23	FORD TRANSIT CONNECT	12
56220	07-12	KIA RONDO	12
56220	10-19	KIA SOUL	12
56222	07-12	KIA RONDO	12
56222	10-18	KIA SOUL	12

Part #	Years	Make / Model	Master Pk
56223	14-20	MITSUBISHI MIRAGE	12
56223	17-20	MITSUBISHI MIRAGE G4	12
56224	11-20	VOLVO S60	12
56224	16-18	VOLVO S60 CROSS COUNTRY	12
56225	05-23	NISSAN FRONTIER	12
56225	05-12	NISSAN PATHFINDER	12
56225	05-15	NISSAN XTERRA	12
56225	09-12	SUZUKI EQUATOR	12
56226	05-23	NISSAN FRONTIER	9
56226	05-12	NISSAN PATHFINDER	9
56226	09-13	NISSAN XTERRA	9
56226	09-12	SUZUKI EQUATOR	9
56227	11-24	NISSAN LEAF	12
56228	14-18	KIA FORTE5	12
56230	15-23	DODGE CHALLENGER	12
56231	04-08	ACURA TL	12
56233	17-20	HYUNDAI ELANTRA	12
56233	14-18	HYUNDAI ELANTRA GT	12
56233	17-21	HYUNDAI IONIQ	12
56234	15-23	DODGE CHARGER	12
56235	15-23	CHRYSLER 300	12
56241	11-15	HYUNDAI SONATA	12
56242	15-17	CHRYSLER 200	12
56243	16-16	SUBARU CROSSTREK	12
56243	14-15	SUBARU XV CROSSTREK	12
56245	13-17	BUICK ENCLAVE	18
56245	13-17	CHEVROLET TRAVERSE	18
56245	13-16	GMC ACADIA	18
56245	17-17	GMC ACADIA LIMITED	18
56246	15-19	SUBARU LEGACY	12
56247	15-17	HYUNDAI SONATA	12
56248	14-20	INFINITI Q50	12
56251	11-16	KIA SPORTAGE	12
56254	13-17	HYUNDAI ACCENT	12
56256	14-18	KIA SORENTO	12
56257	12-15	CHEVROLET CAPTIVA SPORT	12
56258	13-20	LINCOLN MKZ	12
56259	12-16	SUBARU IMPREZA	12
56259	15-20	SUBARU WRX	12
56259	15-20	SUBARU WRX STI	12
56261	15-20	TOYOTA SIENNA	12
56262	15-19	LINCOLN MKC	12
56264	17-17	GENESIS G80	12
56264	15-16	HYUNDAI GENESIS	12
56267	15-24	NISSAN MURANO	12
56268	15-17	LEXUS NX200T	12
56268	15-21	LEXUS NX300H	12
56269	13-22	ACURA ILX	12
56270	15-22	RAM PROMASTER CITY	12
56272	15-18	FORD EDGE	12
56273	15-18	FORD FOCUS	12
56274	15-23	JEEP RENEGADE	12
56275	12-19	TOYOTA PRIUS C	12
56278	11-15	FORD EXPLORER	9
56279	15-18	CHEVROLET CITY EXPRESS	12
56279	13-21	NISSAN NV200	12
56280	14-17	MAZDA 6	12
56281	14-20	INFINITI QX60	9
56281	13-20	NISSAN PATHFINDER	9
56282	16-18	TOYOTA TACOMA	12
56283	16-16	HYUNDAI ELANTRA	12
56284	16-22	HONDA HR-V	12
56285	17-23	VOLVO S90	12
56285	16-23	VOLVO XC90	12
56287	15-18	VOLVO V60	12
56287	15-18	VOLVO V60 CROSS COUNTRY	12
56288	12-17	BUICK VERANO	12
56291	19-23	HONDA PASSPORT	12
56291	16-22	HONDA PILOT	12
56292	15-18	FORD EDGE	12

Part #	Years	Make / Model	Master Pk
56293	15-22	LAND ROVER RANGE ROVER	18
56293	15-22	LAND ROV. RNGE ROVER SPORT	18
56294	16-23	NISSAN MAXIMA	12
56295	12-16	KIA RIO	12
56296	18-23	MITSUBISHI ECLIPSE CROSS	12
56296	16-20	MITSUBISHI OUTLANDER	12
56297	15-19	LAND ROV. DISCOVERY SPORT	12
56298	16-18	LINCOLN MKX	12
56299	16-17	HONDA ACCORD	12
56300	18-21	MAZDA 6	12
56300	16-21	MAZDA CX-3	12
56300	16-23	MAZDA MX-5 MIATA	12
56301	16-17	HONDA ACCORD	12
56303	12-16	CHEVROLET SONIC	12
56306	11-19	FORD EXPLORER	9
56306	13-18	FORD POLICE INTERCEP. ULTY	9
56308	16-18	FIAT 500X	12
56309	16-16	SCION IM	12
56309	19-23	TOYOTA COROLLA	12
56309	17-18	TOYOTA COROLLA IM	12
56310	16-16	MAZDA CX-5	12
56311	16-16	SCION IA	12
56311	17-18	TOYOTA YARIS IA	12
56313	16-23	CHEVROLET MALIBU	12
56314	11-20	KIA OPTIMA	12
56315	16-19	CHEVROLET VOLT	12
56316	17-18	HYUNDAI ELANTRA	12
56318	16-18	CHEVROLET CAMARO	12
56319	16-19	CHEVROLET CRUZE	12
56320	17-18	FORD ESCAPE	12
56321	17-22	KIA SPORTAGE	12
56322	17-21	CHRYSLER PACIFICA	12
56322	20-22	CHRYSLER VOYAGER	12
56323	16-18	CADILLAC CT6	12
56324	16-19	HONDA CIVIC	12
56325	21-23	BUICK ENVISION	18
56325	17-24	CADILLAC XT5	18
56325	20-24	CADILLAC XT6	18
56325	19-24	CHEVROLET BLAZER	18
56325	17-23	GMC ACADIA	18
56326	17-24	CADILLAC XT5	5
56326	20-24	CADILLAC XT6	5
56326	19-24	CHEVROLET BLAZER	5
56326	17-23	GMC ACADIA	5
56327	22-23	FORD E-TRANSIT	12
56327	15-23	FORD TRANSIT-150	12
56327	15-23	FORD TRANSIT-250	12
56327	15-23	FORD TRANSIT-350	12
56328	11-13	KIA SORENTO	12
56329	07-10	FORD EDGE	12
56329	08-12	FORD ESCAPE	12
56329	04-07	FORD FREESTAR	12
56329	07-10	LINCOLN MKX	12
56329	08-11	MAZDA TRIBUTE	12
56329	05-11	MERCURY MARINER	12
56330	11-20	DODGE JOURNEY	12
56331	11-16	CHRYSLER TOWN & COUNTRY	12
56331	11-20	DODGE GRAND CARAVAN	12
56332	13-18	HYUNDAI SANTA FE	12
56332	19-19	HYUNDAI SANTA FE XL	12
56332	07-12	HYUNDAI VERACRUZ	12
56332	15-21	KIA SEDONA	12
56332	07-20	KIA SORENTO	12
56333	08-10	CHRYSLER TOWN & COUNTRY	12
56333	08-12	DODGE CALIBER	12
56333	11-13	DODGE DURANGO	12
56333	08-10	DODGE GRAND CARAVAN	12
56333	08-17	JEEP PATRIOT	12
56334	07-12	DODGE NITRO	12
56334	08-12	JEEP LIBERTY	12

Part #	Years	Make / Model	Master Pk
56335	13-16	FORD ESCAPE	12
56336	14-23	DODGE DURANGO	12
56338	16-23	MAZDA CX-9	12
56339	16-23	NISSAN ALTIMA	12
56340	05-09	BUICK LACROSSE	18
56341	01-05	HONDA CIVIC	12
56342	11-17	NISSAN QUEST	12
56343	09-19	FORD FLEX	12
56344	11-17	JEEP COMPASS	12
56345	05-07	FORD ESCAPE	12
56345	05-06	MAZDA TRIBUTE	12
56346	07-12	HYUNDAI SANTA FE	12
56347	07-09	HYUNDAI ENTOURAGE	12
56347	06-14	KIA SEDONA	12
56348	10-18	HYUNDAI TUCSON	12
56349	16-23	TOYOTA TACOMA	12
56350	23-23	LEXUS ES300H	12
56350	13-18	TOYOTA AVALON	12
56350	13-18	TOYOTA RAV4	12
56351	13-20	FORD FUSION	12
56353	16-23	TOYOTA PRIUS	12
56354	17-19	CHEVROLET CRUZE	18
56355	10-17	VOLVO XC60	12
56356	17-19	BUICK LACROSSE	12
56357	14-20	INFINITI QX60	5
56357	13-20	NISSAN PATHFINDER	5
56362	16-17	HYUNDAI SONATA	12
56363	17-22	BUICK ENCORE	12
56364	16-20	BUICK ENVISION	18
56365	09-11	HONDA PILOT	12
56365	17-23	HONDA RIDGELINE	12
56366	09-11	HONDA PILOT	12
56366	17-23	HONDA RIDGELINE	12
56367	17-23	SUBARU IMPREZA	12
56368	12-16	SUBARU IMPREZA	12
56369	17-21	JEEP COMPASS	18
56370	17-24	HONDA CR-V	12
56371	17-22	TOYOTA PRIUS PRIME	12
56372	17-20	CHEVROLET SONIC	12
56374	17-17	VOLKSWAGEN GOLF R	12
56374	12-15	VOLKSWAGEN PASSAT	12
56375	18-18	CHEVROLET EQUINOX	18
56375	18-18	GMC TERRAIN	18
56376	17-22	KIA NIRO	18
56377	17-21	MAZDA CX-5	12
56378	11-17	HONDA ODYSSEY	12
56379	17-19	INFINITI QX30	12
56380	12-19	VOLKSWAGEN BEETLE	12
56381	17-21	HYUNDAI IONIQ	12
56382	18-23	HONDA ODYSSEY	12
56383	18-20	VOLKSWAGEN ATLAS	12
56384	18-22	TOYOTA C-HR	18
56385	15-20	TOYOTA YARIS	18
56386	08-16	VOLVO XC70	18
56387	16-23	CHEVROLET MALIBU	12
56388	16-18	VOLKSWAGEN PASSAT	18
56389	18-20	BUICK REGAL SPORTBACK	12
56389	18-20	BUICK REGAL TOURX	12
56390	18-19	HYUNDAI SONATA	12
56391	17-17	VOLKSWAGEN GOLF ALLTRACK	12
56393	18-24	BUICK ENCLAVE	5
56393	18-23	CHEVROLET TRAVERSE	5
56394	18-24	BUICK ENCLAVE	5
56394	18-23	CHEVROLET TRAVERSE	5
56395	15-20	HONDA FIT	18
56396	16-21	HONDA CIVIC	18
56397	17-19	NISSAN ROGUE SPORT	12
56399	17-21	CHRYSLER PACIFICA	12
56399	20-22	CHRYSLER VOYAGER	12
56400	14-19	NISSAN VERSA	12

Part #	Years	Make / Model	Master Pk
56401	18-20	NISSAN PATHFINDER	5
56402	18-22	HONDA ACCORD	12
56403	18-22	VOLKSWAGEN TIGUAN	12
56404	13-17	AUDI Q5	12
56404	14-17	AUDI SQ5	12
56405	18-20	VOLKSWAGEN GTI	12
56406	19-22	JEEP CHEROKEE	12
56407	20-23	JEEP GLADIATOR	12
56407	18-24	JEEP WRANGLER	12
56408	14-18	KIA FORTE5	12
56409	18-21	HYUNDAI KONA	12
56410	14-18	KIA FORTE	12
56410	14-16	KIA FORTE KOUP	12
56412	18-22	MITSUBISHI OUTLANDER PHEV	12
56413	15-20	FORD F-150	5
56416	19-22	TOYOTA AVALON	12
56417	18-20	TOYOTA CAMRY	12
56418	18-23	NISSAN KICKS	12
56419	19-22	CHEVROLET TRAX	12
56420	20-22	HYUNDAI PALISADE	12
56420	22-24	HYUNDAI SANTA CRUZ	12
56420	19-23	HYUNDAI SANTA FE	12
56420	22-24	HYUNDAI TUCSON	12
56420	22-24	KIA CARNIVAL	12
56420	21-22	KIA SORENTO	12
56420	20-22	KIA TELLURIDE	12
56421	19-23	HONDA PASSPORT	12
56421	16-22	HONDA PILOT	12
56422	12-17	VOLKSWAGEN TIGUAN	12
56423	98-98	MERCURY VILLAGER	12
56423	98-03	NISSAN FRONTIER	12
56423	98-02	NISSAN QUEST	12
56425	06-07	NISSAN MURANO	12
56426	14-21	JEEP GRAND CHEROKEE	12
56426	22-22	JEEP GRAND CHEROKEE WK	12
56427	19-24	CADILLAC XT4	18
56429	18-24	CHEVROLET EQUINOX	12
56429	18-23	GMC TERRAIN	12
56430	13-22	LEXUS ES300H	12
56430	13-22	LEXUS ES350	12
56431	19-24	FORD RANGER	5
56432	19-19	FORD ESCAPE	12
56434	23-23	MITSUBISHI OUTLANDER PHEV	12
56434	19-23	TOYOTA RAV4	12
56435	19-22	MAZDA 3	12
56436	19-24	FORD EDGE	12
56437	19-24	FORD EDGE	12
56438	01-02	TOYOTA TUNDRA	12
56439	19-23	TOYOTA PRIUS AWD-E	12
56440	16-22	VOLKSWAGEN PASSAT	12
56442	07-08	HYUNDAI ENTOURAGE	12
56442	19-21	HYUNDAI TUCSON	12
56442	19-21	HYUNDAI VELOSTER	12
56442	06-14	KIA SEDONA	12
56442	21-23	KIA SELTOS	12
56442	15-23	KIA SOUL	12
56443	20-22	FORD F-250 SUPER DUTY	12
56443	20-22	FORD F-350 SUPER DUTY	12
56443	20-22	FORD F-450 SUPER DUTY	12
56444	20-24	SUBARU LEGACY	12
56445	20-22	NISSAN ROGUE SPORT	12
56446	19-23	LINCOLN NAUTILUS	12
56448	20-22	FORD ESCAPE	12
56450	20-23	MAZDA CX-30	12
56451	20-23	HYUNDAI VENUE	12
56452	20-21	TOYOTA HIGHLANDER	12
56453	20-22	LINCOLN AVIATOR	12
56454	20-23	TOYOTA COROLLA	12
56456	20-24	BUICK ENCORE GX	12
56457	19-23	KIA FORTE	12

Part #	Years	Make / Model	Master Pk
56458	21-23	TOYOTA SIENNA	12
56459	21-23	NISSAN ROGUE	12
56460	21-23	TOYOTA VENZA	12
56461	20-23	HYUNDAI SONATA	12
56462	21-23	FORD BRONCO SPORT	12
56464	21-24	VOLKSWAGEN ATLAS	12
56464	20-24	VOLKS. ATLAS CROSS SPORT	12
56465	21-23	FORD F-150	12
56466	21-22	HYUNDAI PALISADE	5
56466	22-24	HYUNDAI SANTA CRUZ	5
56466	22-24	HYUNDAI TUCSON	5
56466	22-24	KIA CARNIVAL	5
56466	21-22	KIA TELLURIDE	5
56467	22-22	MITSUBISHI OUTLANDER	12
56468	21-23	FORD BRONCO	12
56469	21-24	KIA K5	12
56470	21-23	HYUNDAI ELANTRA	12
56471	21-23	FORD BRONCO	12
56472	22-23	JEEP COMPASS	12
56473	22-23	JEEP GRAND CHEROKEE	12
56473	21-23	JEEP GRAND CHEROKEE L	12
56474	22-23	KIA SORENTO	12
56474	23-23	KIA SPORTAGE	12
56477	22-23	FORD MAVERICK	12
56478	14-23	RAM PROMASTER 1500	12
56478	14-23	RAM PROMASTER 2500	12
56478	14-23	RAM PROMASTER 3500	12
56479	22-23	TOYOTA COROLLA CROSS	12
56480	20-23	TOYOTA HIGHLANDER	12
56481	21-23	FORD F-150	12
56482	20-23	MITSUBISHI OUTLANDER SPORT	12
56483	23-24	HONDA HR-V	12
56484	22-22	HYUNDAI IONIQ 5	12
56486	21-23	FORD F-150	12
56487	22-23	MAZDA CX-5	12
56487	23-24	MAZDA CX-50	12
56488	20-24	BUICK ENCORE GX	12
56489	21-23	TOYOTA SIENNA	12
56490	23-24	KIA TELLURIDE	12
56491	23-23	HYUNDAI PALISADE	12
56492	22-24	CHRYSLER PACIFICA	12
56493	20-23	TOYOTA CAMRY	12
56510	04-12	CHEVROLET COLORADO	12
56510	04-12	GMC CANYON	12
56510	06-06	ISUZU I-280	12
56510	07-08	ISUZU I-290	12
56510	06-06	ISUZU I-350	12
56510	07-08	ISUZU I-370	12
56513	08-12	TOYOTA HILUX	12
56513	93-98	TOYOTA T100	12
56513	05-15	TOYOTA TACOMA	12
56594	10-17	CHEVROLET EQUINOX	18
56594	10-17	GMC TERRAIN	18
56673	04-07	FORD FREESTAR	18
56673	04-07	MERCURY MONTEREY	18
58900	10-17	CHEVROLET EQUINOX	12
58900	10-17	GMC TERRAIN	12
58901	07-11	HONDA CR-V	12
58902	98-06	JEEP WRANGLER	12
58903	07-18	JEEP WRANGLER	12
58904	12-16	HONDA CR-V	12
58905	12-14	FORD FOCUS	12
58906	13-18	RAM 1500	12
58906	19-23	RAM 1500 CLASSIC	12
58907	14-21	JEEP GRAND CHEROKEE	12
58907	22-22	JEEP GRAND CHEROKEE WK	12
58908	13-17	BUICK ENCLAVE	12
58908	13-16	GMC ACADIA	12
58908	17-17	GMC ACADIA LIMITED	12
58909	14-18	JEEP CHEROKEE	12

Part #	Years	Make / Model	Master Pk
58910	15-22	CHEVROLET COLORADO	12
58910	15-22	GMC CANYON	12
58911	12-18	FIAT 500	12
58912	09-14	FORD F-150	12
58913	06-12	TOYOTA RAV4	12
58914	11-14	FORD EDGE	12
58915	99-04	JEEP GRAND CHEROKEE	12
58916	09-10	DODGE RAM 1500	12
58916	11-18	RAM 1500	12
58916	19-23	RAM 1500 CLASSIC	12
58917	02-07	JEEP LIBERTY	12
58922	13-17	CHEVROLET TRAVERSE	12
58924	07-12	CHEVROLET AVALANCHE	12
58925	04-07	BUICK RAINIER	12
58925	02-08	CHEVROLET TRAILBLAZER	12
58925	02-09	GMC ENVOY	12
58925	02-04	OLDSMOBILE BRAVADA	12
58926	04-12	CHEVROLET COLORADO	12
58926	04-12	GMC CANYON	12
58926	06-06	ISUZU I-280	12
58926	07-08	ISUZU I-290	12
58926	06-06	ISUZU I-350	12
58926	07-08	ISUZU I-370	12
58927	07-12	CADILLAC ESCALADE	12
58927	07-13	CHEVROLET SUBURBAN 1500	12
58927	07-12	CHEVROLET TAHOE	12
58927	07-14	GMC YUKON	12
58927	07-14	GMC YUKON XL 1500	12
58928	02-07	SATURN VUE	12
58929	05-10	CHEVROLET COBALT	12
58929	06-11	CHEVROLET HHR	12
58929	07-09	PONTIAC G5	12
58929	05-06	PONTIAC PURSUIT	12
58931	05-10	CHEVROLET COBALT	12
58931	07-10	PONTIAC G5	12
58931	05-06	PONTIAC PURSUIT	12
58932	08-12	BUICK ENCLAVE	12
58932	08-12	CHEVROLET MALIBU	12
58932	09-12	CHEVROLET TRAVERSE	12
58933	12-12	CHEVROLET CAPTIVA SPORT	12
58933	08-10	SATURN VUE	12
58934	13-15	CHEVROLET MALIBU	12
58934	16-16	CHEVROLET MALIBU LIMITED	12
58935	11-15	CHEVROLET CRUZE	12
58935	16-16	CHEVROLET CRUZE LIMITED	12
58936	12-16	CHEVROLET SONIC	12
58937	07-11	DODGE NITRO	12
58937	08-12	JEEP LIBERTY	12
58938	11-16	JEEP COMPASS	12
58939	05-06	JEEP GRAND CHEROKEE	12
58940	07-13	JEEP GRAND CHEROKEE	12
58941	09-19	FORD FLEX	12
58942	06-12	FORD FUSION	12
58943	13-16	FORD ESCAPE	12
58944	12-18	FORD FOCUS	12
58945	13-20	FORD FUSION	12
58946	11-13	FORD FIESTA	12
58947	07-11	HONDA ELEMENT	12
58948	07-13	HONDA FIT	12
58949	02-06	HONDA CR-V	12
58950	06-12	SUZUKI GRAND VITARA	12
58950	07-11	SUZUKI SX4	12
58952	07-10	FORD EDGE	12
58952	05-12	FORD ESCAPE	12
58952	04-07	FORD FREESTAR	12
58952	07-10	LINCOLN MKX	12
58952	08-11	MAZDA TRIBUTE	12
58952	05-11	MERCURY MARINER	12
58954	17-21	FORD ESCAPE	12
58955	16-18	ACURA MDX	12

Part #	Years	Make / Model	Master Pk
58956	13-18	TOYOTA RAV4	12
58957	14-23	DODGE DURANGO	12
58958	17-21	JEEP COMPASS	12
58959	08-12	DODGE CALIBER	12
58959	11-13	DODGE DURANGO	12
58959	08-17	JEEP PATRIOT	12
58960	10-19	LINCOLN MKT	12
58962	13-15	SUBARU XV CROSSTREK	12
58963	19-22	JEEP CHEROKEE	12
58964	20-23	JEEP GLADIATOR	12
58964	18-23	JEEP WRANGLER	12
58965	15-20	CADILLAC ESCALADE	12
58965	15-20	GMC YUKON	12
58965	15-20	GMC YUKON XL	12
58966	15-20	CHEVROLET SUBURBAN	12
58966	15-20	CHEVROLET TAHOE	12
58967	16-18	CHEVROLET SILVERADO 1500	12
58967	19-19	CHEVY SILVERADO 1500 LD	12
58967	16-19	CHEVY SILVERADO 2500 HD	12
58967	16-19	CHEVY SILVERADO 3500 HD	12
58967	16-18	GMC SIERRA 1500	12
58967	19-19	GMC SIERRA 1500 LIMITED	12
58967	16-19	GMC SIERRA 2500 HD	12
58967	16-19	GMC SIERRA 3500 HD	12
58968	16-20	BUICK ENVISION	12
58970	15-18	FORD F-150	12
58971	18-21	CHEVROLET EQUINOX	12
58972	14-19	FORD FIESTA	12
58973	17-19	GMC ACADIA	12
58974	18-21	CHEVROLET EQUINOX	12
58975	19-23	RAM 1500	12
58976	16-19	FORD EXPLORER	12
58977	14-19	FORD FIESTA	12
58978	10-16	CADILLAC SRX	12
58983	20-22	LINCOLN AVIATOR	12
58984	19-24	CHEVROLET SILVERADO 1500	12
58984	22-22	CHEVY SILVERADO 1500 LTD	12
58984	20-23	CHEVY SILVERADO 2500 HD	12
58984	20-23	CHEVY SILVERADO 3500 HD	12
58984	19-24	GMC SIERRA 1500	12
58984	22-22	GMC SIERRA 1500 LIMITED	12
58984	20-23	GMC SIERRA 2500 HD	12
58984	20-23	GMC SIERRA 3500 HD	12
58985	21-23	CHEVROLET SUBURBAN	12
58985	21-23	CHEVROLET TAHOE	12
58985	21-23	GMC YUKON	12
58985	21-23	GMC YUKON XL	12
58986	19-24	FORD RANGER	12
58987	17-22	FORD F-250 SUPER DUTY	12
58987	17-22	FORD F-350 SUPER DUTY	12
58988	22-24	CHEVROLET EQUINOX	12
58988	07-17	FORD EXPEDITION	12
58989	21-23	FORD F-150	12
58992	21-23	FORD BRONCO	12
58993	21-23	CADILLAC ESCALADE	12
58993	21-23	CADILLAC ESCALADE ESV	12
58994	13-18	RAM 2500	12
58994	13-18	RAM 3500	12
58995	19-22	RAM 2500	12
58995	19-22	RAM 3500	12
58996	21-23	FORD BRONCO	12
58997	22-23	JEEP COMPASS	12
58998	22-23	JEEP GRAND CHEROKEE	12
58998	21-23	JEEP GRAND CHEROKEE L	12

LIMITED LIFETIME WARRANTY

CURT provides limited lifetime warranty coverage against defects in factory workmanship and materials for CURT products ("Products") sold by factory authorized dealers for use by retail (end use) consumers. This Limited Warranty is provided only to the original Product consumer, and applies only to the original installation. This Limited Warranty is not transferrable and does not extend or apply to anyone else. For consumers in the U.S.: this Limited Warranty gives you specific legal rights; you also may have other rights, which vary from state to state.

This Limited Warranty is the sole and exclusive warranty provided by CURT, and all other warranties and conditions are excluded and disclaimed. **UNDER THE LAW OF CERTAIN STATES, THERE MAY BE NO IMPLIED CONDITIONS OR WARRANTIES FROM CURT APPLICABLE TO YOUR PRODUCT, AND ALL IMPLIED CONDITIONS OR WARRANTIES (INCLUDING ANY WARRANTY OF MERCHANTABILITY OR FITNESS FOR A PARTICULAR PURPOSE) ARE EXCLUDED AND DISCLAIMED WHERE ALLOWED BY LAW.** If implied warranties are imposed under any applicable state law, all such implied warranties are limited to the duration of the applicable provisions of this Limited Warranty. For consumers in the U.S.: some states do not allow limitations on how long an implied warranty lasts, so the above limitation may not apply to you.

COVERED PRODUCTS AND LIMITATIONS

CURT provides the following Limited Warranty coverage:

Product	Workmanship & Materials	Components & Parts	Finishings & Coatings
Hitches	Lifetime	1-year	1-year
Brake controllers	Lifetime	1-year	1-year
Electrical and wiring	1-year	1-year	1-year
Other accessories	Lifetime	1-year	1-year

Each of the warranty coverage periods runs from the date of purchase of the Product (proof of purchase is required) and applies only to warranted defects that first occur and are reported to CURT within the applicable warranty period. CURT retains the right to determine to its reasonable satisfaction whether any claimed defect is covered by this Limited Warranty.

Certain items are excluded from Limited Warranty coverage by CURT, and this **Limited Warranty coverage does not apply to:**

- Wear and tear from normal use, including damage from road debris
- Improper product selection, application, installation or maintenance
- Modifications, including the attachment of other hardware or components
- Misuse, abuse, overloading, improper trailering or hauling, accident
- Corrosion or damage due to environmental conditions

REMEDIES UNDER THIS LIMITED WARRANTY

If a defect covered by this warranty occurs, CURT will repair or replace the Product, or refund the purchase price, in its sole discretion. This "repair, replacement or refund" remedy is the **sole and exclusive remedy** under this Limited Warranty. CURT has **no responsibility or liability for any incidental or consequential damages**, such as loss of use of vehicles or trailers, towing charges, storage charges, labor and service charges for removing or reinstalling products, loss of or damage to personal property, or interest or finance charges, all of which are specifically **excluded and disclaimed** from this Limited Warranty. For consumers in the U.S.: some states do not allow the exclusion or limitation of incidental or consequential damages, so the above limitation or exclusion may not apply to you.

RESPONSIBILITY OF PURCHASER

The Purchaser must have proof of purchase to obtain service under this Limited Warranty. Contact CURT for a Returned Goods Authorization (RGA) and return instructions; CURT will not accept Products unless an RGA has been issued. The Purchaser must deliver the Product to CURT or an authorized CURT dealer along with the RGA number and proof of purchase.

The CURT Limited Warranty policy in effect on the date you purchased your Product determines the applicable warranty coverage, and subsequent or prior CURT warranties are not applicable to your Product. The terms of this Limited Warranty cannot be changed or modified, except by a written agreement signed by an officer of CURT. CURT reserves the right to improve its products through changes in design or materials without being obligated to the owners of the Products of the same or similar models.

Contact information:
CURT Headquarters
6208 Industrial Drive
Eau Claire, WI 54701
877.287.8634

CURT

TRUST THE TOWING EXPERTS.™

CURT products are thoroughly tested and proven reliable so your customers have confidence for navigating the road ahead. That's why CURT continues to manufacture our custom-fit trailer hitches domestically in the USA and why we maintain dedicated testing and engineering teams for continuous improvement.

Our goal is to produce the widest variety of products that give your consumers the confidence to tow safely. At CURT, we value producing quality products that provide hardworking people the reliability they need when towing — from the contractor who tows daily to diehard sportsmen towing towards their next big adventure to ordinary families when venturing out on summer road trips.

CURT offers your customers the freedom to pursue their passion — whether they're towing a 30,000-pound trailer or packing up for a weekend getaway — and provides peace of mind for enjoying every single mile safely and securely.

TO SEE OUR WARRANTY, VISIT CURTMFG.COM

All product names, logos, brands, and other trademarks shown are the property of their respective trademark holders, and use of them does not imply any affiliation with or endorsement by them.

CONNECT WITH US

PHONE
877.287.8634

WEB
CURTMFG.COM

SOCIAL MEDIA
@CURTMFG / #CURT

LOCATIONS

HEADQUARTERS
6208 INDUSTRIAL DRIVE
EAU CLAIRE, WI 54701

ATLANTA
110 NORTHPOINT PARKWAY
SUITE 200
ACWORTH, GA 30102

DALLAS
3535 N HOUSTON SCHOOL ROAD
SUITE 400
LANCASTER, TX 75134

EDMONTON
UNIT #2
12642 184TH STREET NW
EDMONTON, ALBERTA T5V 1T4

SEATTLE
6546 20TH STREET EAST
FIFE, WA 98424

SOUTH BEND
408 SOUTH BYRKIT AVENUE
MISHAWAKA, IN 46544

TORONTO
845 INTERMODAL DRIVE
UNIT 1
BRAMPTON, ON L6T 5W2

All product names, logos, brands, and other trademarks shown are the property of their respective trademark holders, and use of them does not imply any affiliation with or endorsement by them.